M2 L105

SUBSURFACE WASTEWATER DISPOSAL SYSTEM APPLICATION

Department of Human Services
Division of Health Engineering
(207)289-3826

PROPERTY ADDRESS

Town Or Plantation	Augusta
Street Subdivision Lot #	199 8 Rod Road

PROPERTY OWNERS NAME

Last: Wright First: Sarah

Applicant Name:	Same
Mailing Address of Owner/Applicant (If Different)	Box 1180 8 Rod Road Augusta, ME 04330

AUGUSTA Caution: Permit Required 3099 TOWN COPY

Date Permit Issued: 8 26 94 $ 60.00 FEE ☐ If Double Fee Charged

Local Plumbing Inspector Signature L.P.I. # 808

Owner/Applicant Statement

I certify that the information submitted is correct to the best of my knowledge and understand that any falsification is reason for the Local Plumbing Inspector to deny a Permit.

X Sarah E. Wright 9-26-94

Signature of Owner/Applicant Date

Caution: Inspection Required

I have inspected the installation authorized above and found it to be in compliance with the Subsurface Wastewater Disposal Rules.

Local Plumbing Inspector Signature Date Approved

Ruff insp 11/16/94 JRT

PERMIT INFORMATION

THIS APPLICATION IS FOR:
1. ☒ NEW SYSTEM
2. ☐ REPLACEMENT SYSTEM
3. ☐ EXPANDED SYSTEM
4. ☐ EXPERIMENTAL SYSTEM

SEASONAL CONVERSION
to be completed by the LPI
5. ☐ SYSTEM COMPLIES WITH RULES
6. ☐ CONNECTED TO SANITARY SEWER
7. ☐ SYSTEM INSTALLED – P# _____
8. ☐ SYSTEM DESIGN RECORDED AND ATTACHED

IF REPLACEMENT SYSTEM:
YEAR FAILING SYSTEM INSTALLED _____
THE FAILING SYSTEM IS:
1. ☐ BED 3. ☐ TRENCH
2. ☐ CHAMBER 4. ☐ OTHER: _____

SIZE OF PROPERTY	ZONING
≈ 3 Acres	Residential

THIS APPLICATION REQUIRES:
1. ☒ NO RULE VARIANCE
2. ☐ NEW SYSTEM VARIANCE Attach New System Variance Form
3. ☐ REPLACEMENT SYSTEM VARIANCE Attach Replacement System Variance Form
   a. ☐ Requiring Local Plumbing Inspector Approval
   b. ☐ Requires State and Local Plumbing Inspector Approval
4. ☐ MINIMUM LOT SIZE VARIANCE

DISPOSAL SYSTEM TO SERVE:
1. ☒ SINGLE FAMILY DWELLING
2. ☐ MODULAR OR MOBILE HOME
3. ☐ MULTIPLE FAMILY DWELLING
4. ☒ OTHER with Office
SPECIFY

INSTALLATION IS:
COMPLETE SYSTEM
1. ☒ NON-ENGINEERED SYSTEM
2. ☐ PRIMITIVE SYSTEM (Includes Alternative Toilet)
3. ☐ ENGINEERED (+2000 gpd)

INDIVIDUALLY INSTALLED COMPONENTS:
4. ☐ TREATMENT TANK (ONLY)
5. ☐ HOLDING TANK _____ GAL
6. ☐ ALTERNATIVE TOILET (ONLY)
7. ☐ NON-ENGINEERED DISPOSAL AREA (ONLY)
8. ☐ ENGINEERED DISPOSAL AREA (ONLY)
9. ☐ SEPARATED LAUNDRY SYSTEM

TYPE OF WATER SUPPLY
Proposed Drilled

DESIGN DETAILS (SYSTEM LAYOUT SHOWN ON PAGE 3)

TREATMENT TANK
1. ☒ SEPTIC: ☒ Regular ☐ Low Profile
2. ☐ AEROBIC

SIZE: 1000 GALS.

WATER CONSERVATION
1. ☒ NONE
2. ☐ LOW VOLUME TOILET
3. ☐ SEPARATED LAUNDRY SYSTEM
4. ☐ ALTERNATIVE TOILET

SPECIFY: _____

PUMPING
1. ☐ NOT REQUIRED
2. ☒ MAY BE REQUIRED (DEPENDING ON TREATMENT TANK LOCATION AND ELEVATION)
3. ☐ REQUIRED

DOSE: 60 GALS.

CRITERIA USED FOR DESIGN FLOW (BEDROOMS, SEATING, EMPLOYEES, WATER RECORDS, ETC.)
2 Bedroom Single family residence and 5 Person office - No Shower Minimum

DESIGN FLOW: 255 (GALLONS/DAY)

SOIL CONDITIONS USED FOR DESIGN PURPOSES

PROFILE	CONDITION
5	C

DEPTH TO LIMITING FACTOR: 40

SIZE RATINGS USED FOR DESIGN PURPOSES
1. ☐ SMALL
2. ☐ MEDIUM
3. ☒ MEDIUM-LARGE
4. ☐ LARGE
5. ☐ EXTRA LARGE

DISPOSAL AREA TYPE/SIZE
1. ☒ BED 900 Sq. Ft.
2. ☐ CHAMBER _____ Sq. Ft. ☐ REGULAR ☐ H-20
3. ☐ TRENCH _____ Linear Ft.
4. ☐ OTHER: _____

SITE EVALUATOR STATEMENT

On 7/11/94 (date) I conducted a site evaluation for this project and certify that the data reported is accurate. The system I propose is in accordance with the Subsurface Wastewater Disposal Rules.

J H Good 252 7/14/94

Site Evaluator Signature SE# Date

(Local Plumbing Inspector's Signature if permit is for Seasonal Conversion.)

SUBSURFACE WASTEWATER DISPOSAL SYSTEM APPLICATION

Department of Human Services
Division of Health Engineering

Town, City, Plantation	Street, Road, Subdivision	Owners Name
Augusta	8 Rod Road	Sarah Wright

SITE PLAN

Scale 1" = 100 Ft.

Distance - feet		
Point	ERP	DZ
1	116	134
2	72	102
3	73	117
TP1	99	123
TP2	81	116

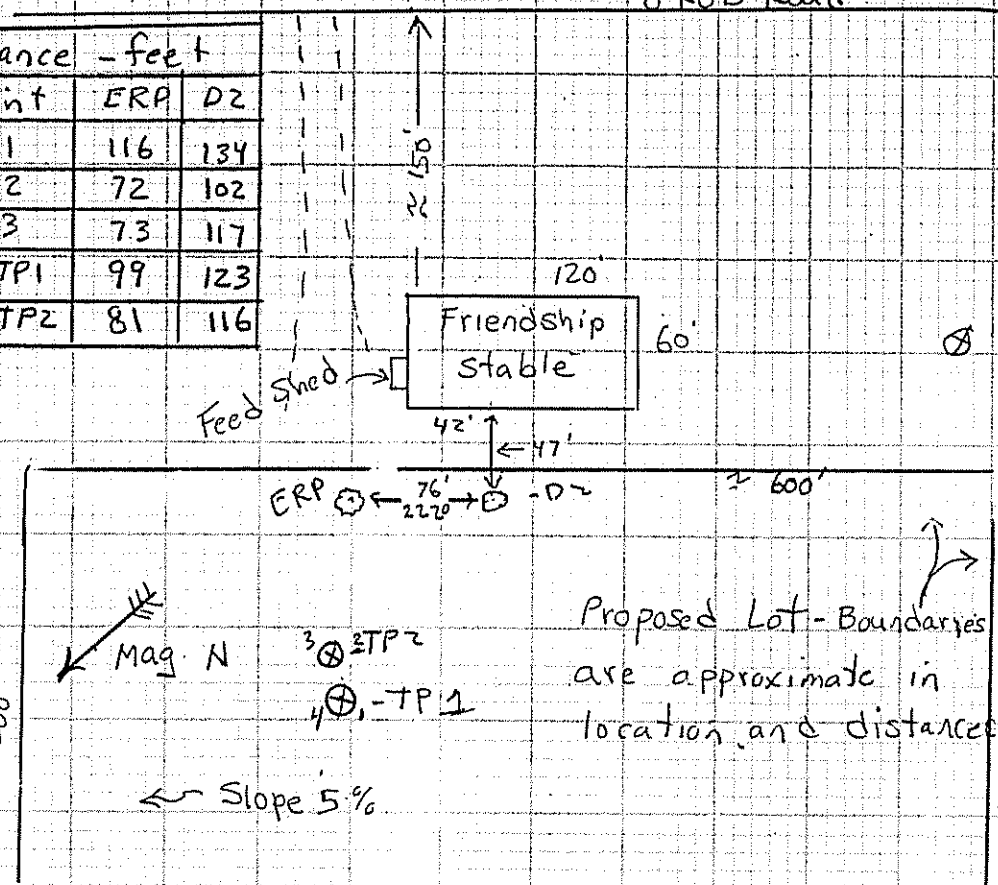

Proposed Lot-Boundaries are approximate in location and distance.

SITE LOCATION PLAN (Attach Map from Maine Atlas for New System Variance)

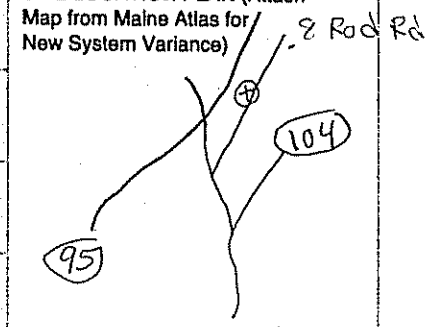

⊗ Local well + Property line information provided by Sarah Wright - No wells withing 100 feet of Proposed Septic area

⊗ Owner-Purchaser must review + sign Soil Test

DZ:- Cherry tree - 3 forks, 12" DB

SOIL DESCRIPTION AND CLASSIFICATION (Location of Observation Holes Shown Above)

Observation Hole TP1 ☒ Test Pit ☐ Boring

0 " Depth of Organic Horizon Above Mineral Soil

Depth below mineral soil surface (inches)	Texture	Consistency	Color	Mottling
0	fine	friable	10YR4/4	none
6	sandy loam		10YR5/6	
15			2.5Y4/4	
20				
30				
40		LOE		
50				

Soil Profile	Classification Condition	Slope %	Limiting Factor	
5	C	3	40"	☒ Ground Water ☐ Restrictive Layer ☐ Bedrock

Observation Hole TP2 ☒ Test Pit ☐ Boring

0 " Depth of Organic Horizon Above Mineral Soil

Depth below mineral soil surface (inches)	Texture	Consistency	Color	Mottling
0	Loamy sand	friable	10YR3/3	None
6				
10			10YR5/6	
15			10YR5/4	
20				
30				
40				common faint
50		LOE		

Soil Profile	Classification Condition	Slope %	Limiting Factor	
5	C	5	40"	☒ Ground Water ☐ Restrictive Layer ☐ Bedrock

Site Evaluator Signature: [signature]

SE#: 252

Date: 7/14/94

HHE-200 Rev.1/84

SUBSURFACE WASTEWATER DISPOSAL SYSTEM APPLICATION

Department of Human Services
Division of Health Engineering

Town, City, Plantation	Street, Road, Subdivision	Owners Name
Augusta	8 Rod Road	Sarah Wright

SUBSURFACE WASTEWATER DISPOSAL PLAN

Scale 1" = 20 Ft.

* CONTRACTORS: SEE ENCLOSED CHECKLIST BEFORE INSTALLATION - Form SS 2
NOTE: PUMP TO BE SIZED BY CONTRACTOR IF PUMPING IS REQUIRED
USE 45 DEGREE SWEEPS WHEN MAKING 90 DEGREE TURN IN EFFLUENT LINE

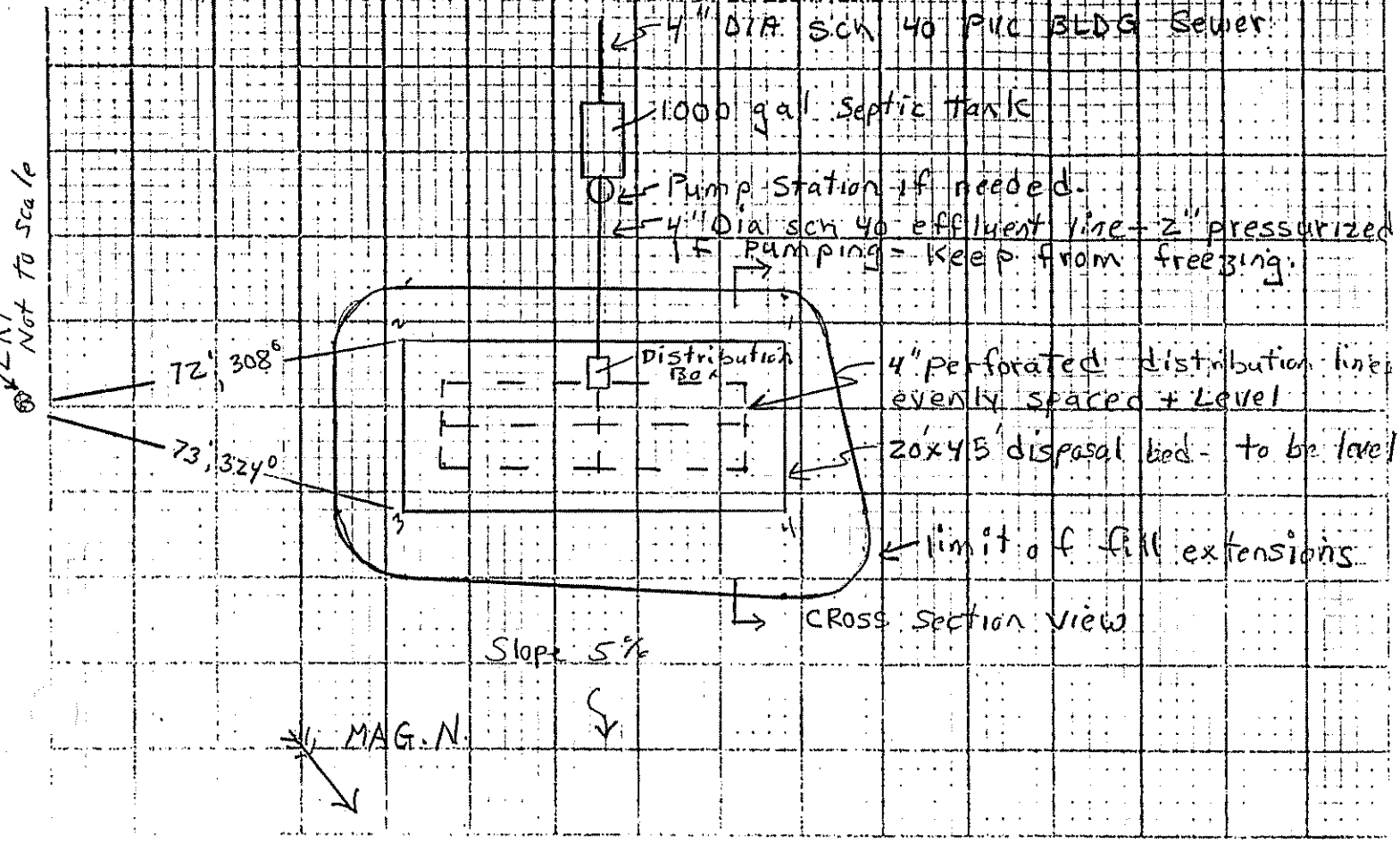

FILL REQUIREMENTS		CONSTRUCTION ELEVATIONS		ELEVATION REFERENCE POINT LOCATION & DESCRIPTION
Depth of Fill (Upslope)	8"	Reference Elevation is	0	
Depth of Fill (Downslope)	17"	Bottom of Disposal Area	-53	Nail in Shiner on 3" DBH
		Top of Distribution Lines or Chambers	-42	Paper Birch tree 65 1/2" 4'

DISPOSAL AREA CROSS SECTION

Scale:
Vertical: 1 inch = 5 Ft.
Horizontal: 1 inch = 10 Ft.

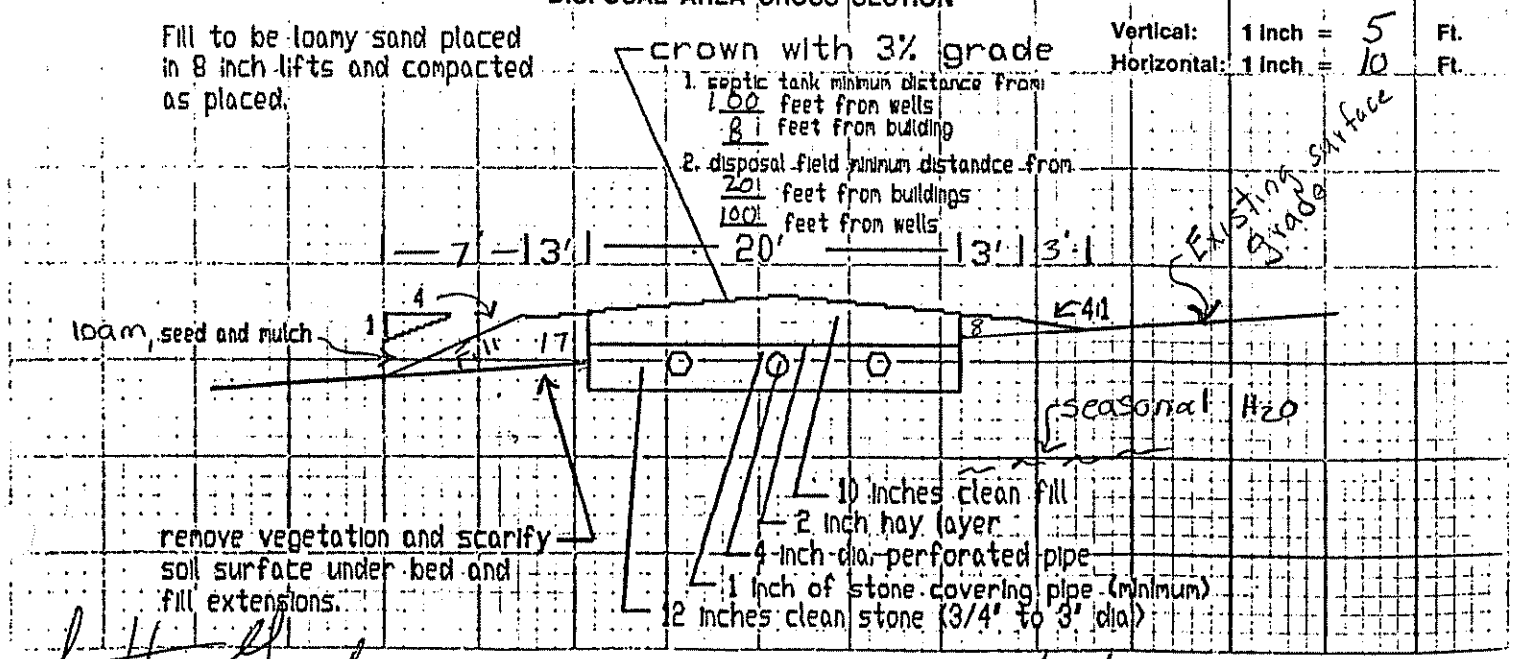

Site Evaluator Signature: [signature] | SE#: 252 | Date: 8/24/94

SOIL SERVICES, INC.

INSTALLERS, OWNERS, AND LPI'S:

Pre-System Installation Checklist and Specifications

1. Leachfield and septic tank must be 100 feet from all wells unless variance allows a lesser setback.

2. Disposal area to be a minimum of 20 feet from foundations. Septic tanks must be a minimum of 8 feet from foundations.

3. Check elevations of system to plan for a workable gravity feed system when pumping is not required. Building sewer pipe must be high enough to allow for proper pitch to septic tank and disposal field.

4. Check to see that system is the proper minimum distance from property boundaries allowed by local ordinances.

5. Pay strict attention to specified elevations in the plan. If plan drawing does not match proposed cut and fill elevations from the system's Construction Elevations (bottom of disposal area elevations) Stop, and call Soil Services for corrections to the plan.

6. If bedrock is encountered higher in elevation than shown on test pit descriptions, cease construction and contact Soil Services.

SPECIFICATIONS

1. Fill to be LOAMY COARSE SAND placed in 8 inch lifts and compacted as placed.

2. Remove vegetation and organic matter, scarify soil surface under bed and fill extensions. Do not construct system in WET WEATHER or soils may become compacted and less permeable to water.

3. Bottom of disposal area to be level to plus of minus 1 inch/100 linear feet. It is critical that bed bottoms under Chamber System are level.

4. Fill extensions shall slope at 25% (4:1) or less. Use schedule 40 PVC building sewer pipe and effluent lines or equivalent. SEAL all septic system components against GROUND WATER ENTRY, Tanks, Pump Stations, Distributions Boxes, Ect.

5. Loam, fertilize, seed, and mulch fill extensions to stabilize. Do not plant woody vegetation on bed or fill extensions.

6. Divert all surface runoff away from septic system, tank and leachfield.

7. Crown Bed Disposal Systems with 3% grade to prevent water accumulation.

CONTACT SOIL SERVICES, INC. (207) 873-1779 WITH ANY QUESTIONS OR APPARENT DISCREPANCIES WITHIN THE PLAN BEFORE CONTINUING CONSTRUCTION!

form ssl rev. 4-93