Howard, Tim

Original to be sent to Division of Health Engineering, Augusta, Maine 04333 by the LPI

This Application Is For: (✓) New System ( ) Expanded System ( ) Conversion Permit ( ) Experimental System ( ) Replacement Of Entire System ( ) Disposal Area Only

An Application For Subsurface Wastewater Disposal Permit

This Is NOT A Permit; This Form When Completed Must Be Presented To The Local Plumbing Inspector To Obtain A Permit

Town	Street, Road, Etc. / If On Water Body, Give Name	Plumbing Permit No.	Date Of Plumbing Permit
Augusta	West River Rd	14907 EP	6-23-78

Owner Of Property	Tel. No.	Name Of Applicant Owner's Agent	Tel. No.
Tim Howard	465-2000		

Street	Street
RFD #2	

Town	State	Zip Code	Town	State	Zip Code
Fairfield	Me	04936			

Owner's Signature	Date	Applicants Signature	Date
X Timothy Howard	6-23-78		

Size Of Lot	Is Lot Zoned?	Type Of Zoning	Subdivision Name	Lot No.
6600± (✓) Sq. Feet ( ) Acres	( ) Yes (✓) No			

The Water Supply For This Property Is: ( ) Dug Well, depth ____; (✓) Drilled Well, depth PROP.; ( ) Spring, depth ____;
Surface water ( ) Body ( ) Course—( ) with disinfection, ( ) without disinfection. Public Utility, name ____

SITE INVESTIGATION

Show Location Of Pits on Site Plan on Page 2

	Soil Profile No. (✓) Pit ( ) Boring	Soil Profile No. ( ) Pit ( ) Boring	Soil Profile No. ( ) Pit ( ) Boring	Soil Profile No. ( ) Pit ( ) Boring
Thickness and Description of each soil encountered: Organic Strata	0"			
1st Strata	DARK BROWN F.S.L. Inches 7" mL	Inches	Inches	Inches
2nd Strata	Red Brown FSL Inches 14' mL	Inches	Inches	Inches
3rd Strata	Olive Brown FSL w/stones Inches 26' SM	Inches	Inches	Inches
4th Strata	Inches	Inches	Inches	Inches
Depth from bottom of organic horizon to: Total Depth of Observation Hole Inches	47"			
Max. Seasonal Water Table Mottling	26 Inches	( ) None Evident Inches	( ) None Evident Inches	( ) None Evident Inches
Impervious Layer Clay, Etc.	30 Inches	( ) None Evident Inches	( ) None Evident Inches	( ) None Evident Inches
Bedrock	(✓) None Evident Type of Bedrock	( ) None Evident Type of Bedrock	( ) None Evident Type of Bedrock	( ) None Evident Type of Bedrock
Surface Slope %	7			
Soil Group	3			
Soil Condition	C			
	Per Table 9-1 Code II	Per Table 9-1 Code II	Per Table 9-1 Code II	Per Table 9-1 Code II

On 6-23-78 (date), a site investigation for this project was completed. I conducted this soil evaluation and certify that the results indicated above best represent the soil conditions found. I recommend the following type and size of private sewage disposal system. I also recommend the proposed private sewage disposal system layout and location shown on page 2.

Signature: Gerald C Poulin
Date Signed: 6-23-78
Site Evaluator License Number: 79

DISPOSAL SYSTEM PROPOSED

Show Location of System and Details on Disposal Plan on Page 2

SYSTEM:
(✓) Combined System
( ) Separated System
If separated system—type of human waste disposal system to be used:
( ) Sealed Vault Privy
( ) Open Pit Privy
( ) Compost Toilet
( ) Chemical Toilet
( ) Incinerator Toilet

TREATMENT TANK
( ) Aerobic Tank
(✓) Septic Tank
(✓) Concrete
( ) Fiberglass
( ) Metal
Size in Gallons: 1000 Gal.

Number of Bedrooms: 3

SUBSURFACE ABSORPTION AREA/TYPE
( ) Bed System — No. of Beds 1 — Length 44 ft — Width 20 ft
( ) Chamber System Number ____
( ) Type A ( ) Single File
( ) Type B ( ) Cluster
( ) Special System — Length N/A ft — Width ____ ft
( ) Laundry System — Type A ____ — No. of Chambers: Type B ____
Name and type of establishment if other than private home: N/A

SIZE
( ) Small
( ) Medium
(✓) Med.-Large
( ) Large
( ) Extra-Large

Design Flow: 264 GPD

SITE MODIFICATION
Fill will be: 10 in. uphill 27 in. downhill

DETAILS
( ) A Distribution Box is required
Pumping is—( ) required (✓) is not required
The dose will be ____ Gallons

DISTANCES
(✓) Yes ( ) No: The proposed subsurface absorption area will be located at least 100 feet from any and all wells; springs; surface water bodies and courses (lake, pond, ocean, brook, stream, river); swamps; marshes; and bogs.
(✓) Yes ( ) No: The proposed subsurface absorption area will be located at least 300 feet from any and all wells and springs producing 2000 gallons or more of water per day and any public water supplies.

PROPERTY/LOT LOCATION MAP

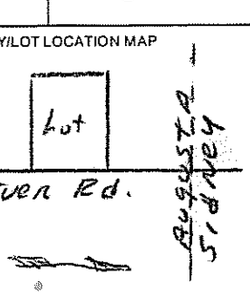

Location—roads, landmarks

WAIVER ( ) State Variance Required ( ) Replacement Variance Required (✓) None Required

FOR THE USE OF LPI ONLY
( ) Denial: Application is denied for the following reasons; portions of the Code II are cited.
Form is incomplete (____pg.) as to ( ) General info., ( ) Site Investigation, ( ) System Proposed, ( ) Site Plan, ( ) Disposal System Plan, ( ) Cross-Section, ( ) Statement. See section 4.1
( ) Site Investigation indicates site is ( ) unsuitable for disposal system. ( ) Unsuitable for system proposed.
( ) System Proposed does not conform to Code.
( ) Site Investigation indicates site modifications are necessary.
(✓) Acceptance: Application for permit is approved ( ) with condition specified, comply with Section ____ (✓) without condition.

Signed LPI: Richard P. Baber Date: 6-23

APPLICATION FOR SUBSURFACE WASTEWATER DISPOSAL PERMIT

(For systems disposing of less than 2000 gallons per day)

Town: AUGUSTA

Street, Road, etc. / If on water body, give name: WEST RIVER Rd

Owner of Property: TIM HOWARD

Site Plan — Scale 1" = _____ ft.

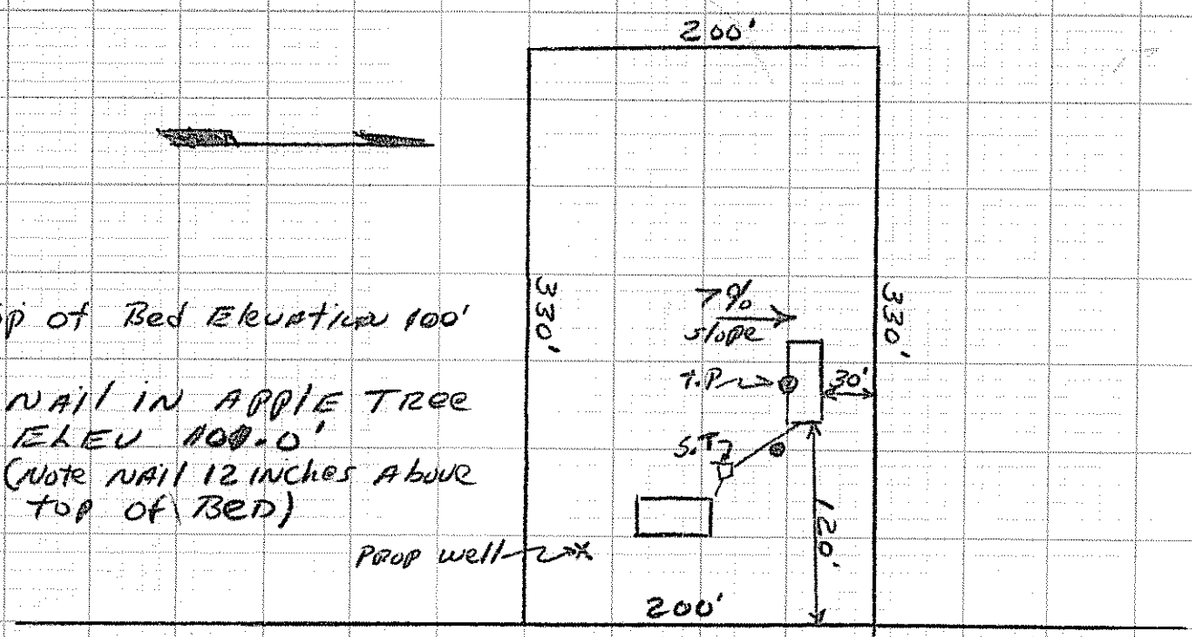

Top of Bed Elevation 100'

● NAIL IN APPLE TREE ELEV 100.0' (Note NAIL 12 INCHES ABOVE TOP OF BED)

● Designates Elevation Reference Point ○ Designates Test Pit

Private Sewage Disposal Plan — Scale 1" = ~~20'~~ or 10'

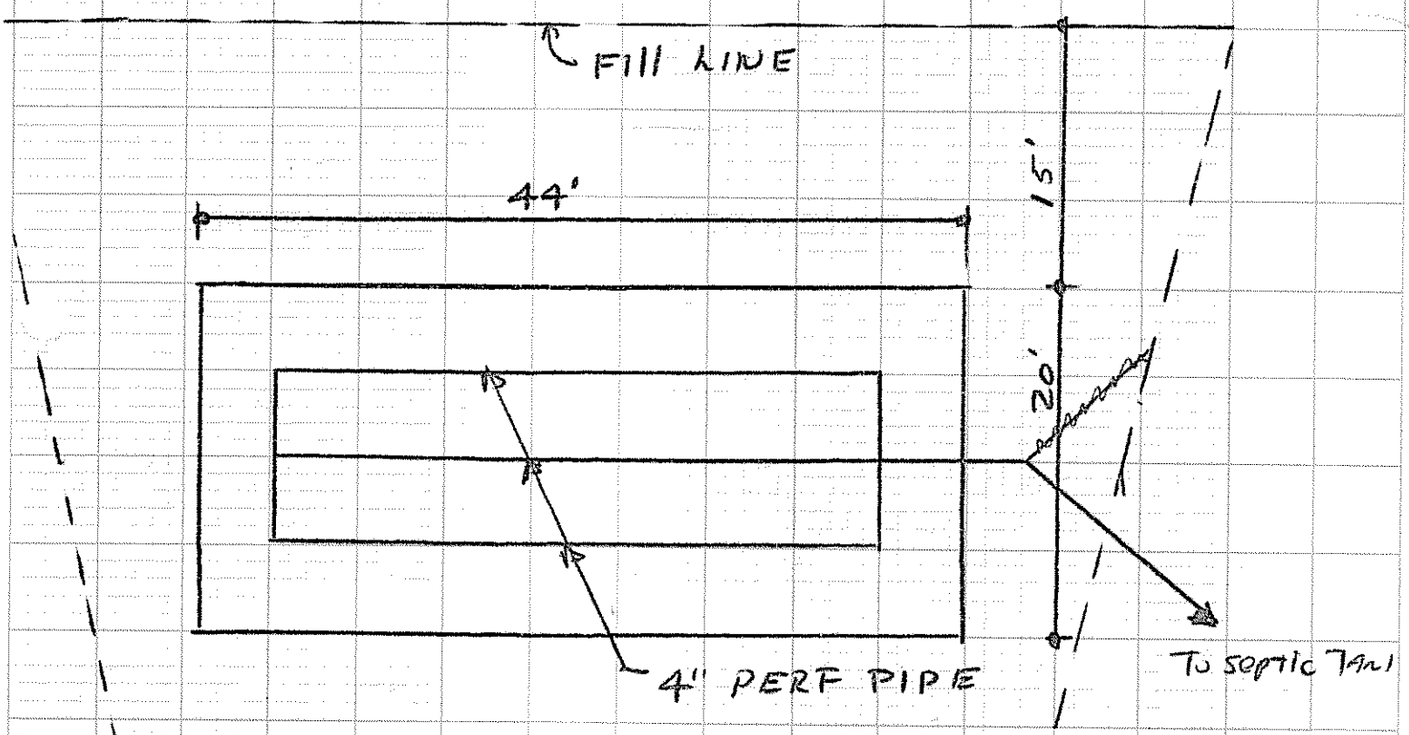

Subsurface Absorption Area Cross-section — Scale: Vertical—1" = 5' or 1" = 4'; Horizontal—1" = 20' or 1" = 10'

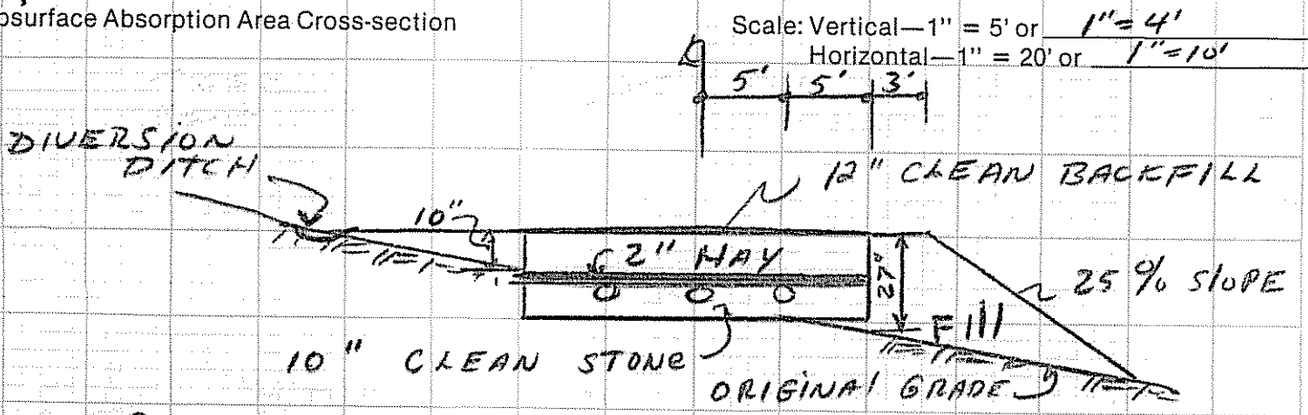

Site Evaluators Signature: Gerald Chaudin — Date: 6-23-78 — License Number: 79

HHE-200 1/78

Statement: (no permit may be issued unless signed)

I certify that all the information submitted to be true and correct; and I understand that issuance of a permit is based upon the information and plans submitted by the applicant. I also understand that any falsification of this application is reason to deny a permit to install a private sewage disposal system and that the permit is valid for a six (6) month period from the date of permit issuance. I understand that no guarantee is intended or implied by reason of any advice or approval given by the Administrative Authority or its agent.

Signature Required

Date: 6-23-78

Applicant: _____

Owner: Timothy Howard