SUBSURFACE WASTEWATER DISPOSAL SYSTEM APPLICATION

Maine Department of Human Services
Division of Health Engineering, 10 SHS
(207) 287-5672 Fax: (207) 287-3165

PROPERTY LOCATION

>> CAUTION: PERMIT REQUIRED - ATTACH IN SPACE BELOW <<

City, Town, or Plantation	AUGUSTA
Street Road	135 BLAIR RD.
Subdivision, Lot #	PARLIN SUB, LOT # 3

AUGUSTA 5403 TOWN 00
Date Permit Issued: 10/8/04 $ 100 ☐ If Double Fee Charged
Local Plumbing Inspector Signature L.P.I. # 850

OWNER/APPLICANT INFORMATION

Name (last, first, MI)	KIRKWOOD, KEVIN ☑ Owner ☐ Applicant
Mailing Address of Owner/Applicant	2538 N. BELFAST AVE. AUGUSTA, ME. 04330
Daytime Tel. #	

Municipal Tax Map # 2 Lot # 39B

OWNER OR APPLICANT STATEMENT
I state and acknowledge that the information submitted is correct to the best of my knowledge and understand that any falsification is reason for the Department and/or Local Plumbing Inspector to deny a Permit.
Signature of Owner or Applicant — Date 9/23/04

CAUTION: INSPECTION REQUIRED
I have inspected the installation authorized above and found it to be in compliance with the Subsurface Wastewater Disposal Rules Application.
Local Plumbing Inspector Signature — (1st) date approved 11/1/04 — (2nd) date approved

PERMIT INFORMATION

TYPE OF APPLICATION
☑ 1. First Time System
☐ 2. Replacement System
Type replaced: _____
Year installed: _____
☐ 3. Expanded System
☐ a. Minor Expansion
☐ b. Major Expansion
☐ 4. Experimental System
☐ 5. Seasonal Conversion

THIS APPLICATION REQUIRES
☑ 1. No Rule Variance
☐ 2. First Time System Variance
☐ a. Local Plumbing Inspector Approval
☐ b. State & Local Plumbing Inspector Approval
☐ 3. Replacement System Variance
☐ a. Local Plumbing Inspector Approval
☐ b. State & Local Plumbing Inspector Approval
☐ 4. Minimum Lot Size Variance
☐ 5. Seasonal Conversion Permit

DISPOSAL SYSTEM COMPONENTS
☑ 1. Complete Non-engineered System
☐ 2. Primitive System (graywater & alt. toilet)
☐ 3. Alternative Toilet, specify: _____
☐ 4. Non-engineered Disposal Area
☐ 5. Holding Tank, _____ gallons
☐ 6. Non-engineered Disposal Field (only)
☐ 7. Separated Laundry System
☐ 8. Complete Engineered System (2000 gpd or more)
☐ 9. Engineered Treatment Tank (only)
☐ 10. Engineered Disposal Field (only)
☐ 11. Pre-treatment, specify: _____
☐ 12. Miscellaneous Components

SIZE OF PROPERTY
1+ ☐ SQ. FT. ☑ ACRES

SHORELAND ZONING
☐ Yes ☑ No

DISPOSAL SYSTEM TO SERVE
☑ 1. Single Family Dwelling Unit, No. of Bedrooms: 3
☐ 2. Multiple Family Dwelling, No. of Units: _____
☐ 3. Other: _____ (specify)
Current Use ☐ Seasonal ☑ Year Round ☐ Undeveloped

TYPE OF WATER SUPPLY
☑ 1. Drilled Well ☐ 2. Dug Well ☐ 3. Private
☐ 4. Public ☐ 5. Other

DESIGN DETAILS (SYSTEM LAYOUT SHOWN ON PAGE 3)

TREATMENT TANK
☑ 1. Concrete
☑ a. Regular
☐ b. Low Profile
☐ 2. Plastic
☐ 3. Other: _____
CAPACITY: 1,000 GAL.

DISPOSAL FIELD TYPE & SIZE
☑ 1. Stone Bed ☐ 2. Stone Trench
☐ 3. Proprietary Device
☐ a. cluster array ☐ c. Linear
☐ b. regular load ☐ d. H-20 load
☐ 4. Other: _____
SIZE: 900 ☑ sq. ft. ☐ lin. ft.

GARBAGE DISPOSAL UNIT
☑ 1. No ☐ 2. Yes ☐ 3. Maybe
If Yes or Maybe, specify one below:
☐ a. multi-compartment tank
☐ b. ___ tanks in series
☐ c. Increase in tank capacity
☐ d. Filter on Tank Outlet

DESIGN FLOW
270 gallons per day
BASED ON:
☑ 1. Table 501.1 (dwelling unit(s))
☐ 2. Table 501.2 (other facilities)
SHOW CALCULATIONS
— for other facilites —
☐ 3. Section 503.0 (meter readings)
ATTACH WATER METER DATA

SOIL DATA & DESIGN CLASS
PROFILE 3 CONDITION 0 DESIGN 3
at Observation Hole # 1
Depth 13"
of Most Limiting Soil Factor

DISPOSAL FIELD SIZING
☐ 1. Small—2.0 sq. ft. / gpd
☐ 2. Medium—2.6 sq. ft. / gpd
☑ 3. Medium—Large 3.3 sq. ft / gpd
☐ 4. Large—4.1 sq. ft. / gpd
☐ 5. Extra Large—5.0 sq. ft. / gpd

EFFLUENT/EJECTOR PUMP
☐ 1. Not Required
☑ 2. May Be Required
☐ 3. Required
Specify only for engineered systems:
DOSE: _____ gallons

SITE EVALUATOR STATEMENT

I certify that on 9/21/04 (date) I completed a site evaluation on this property and state that the data reported are accurate and that the proposed system is in compliance with the State of Maine Subsurface Wastewater Disposal Rules (10-144A CMR 241).

Site Evaluator Signature — SE # 256 — Date 9/23/04

JOHN PHILBRICK
Site Evaluator Name Printed

Note: Changes to or deviations from the design should be confirmed with the Site Evaluator.

SUBSURFACE WASTEWATER DISPOSAL SYSTEM APPLICATION

Department of Human Services
Division of Health Engineering
(207) 287-5672 FAX (207) 287-4172

Tn. City, Plantation: AUGUSTA

Street, Road Subdivision: BLAIR RD. LOT 3

Owner's Name: KEVIN KIRKWOOD

SITE PLAN — Scale 1" = 50 Ft. or as shown

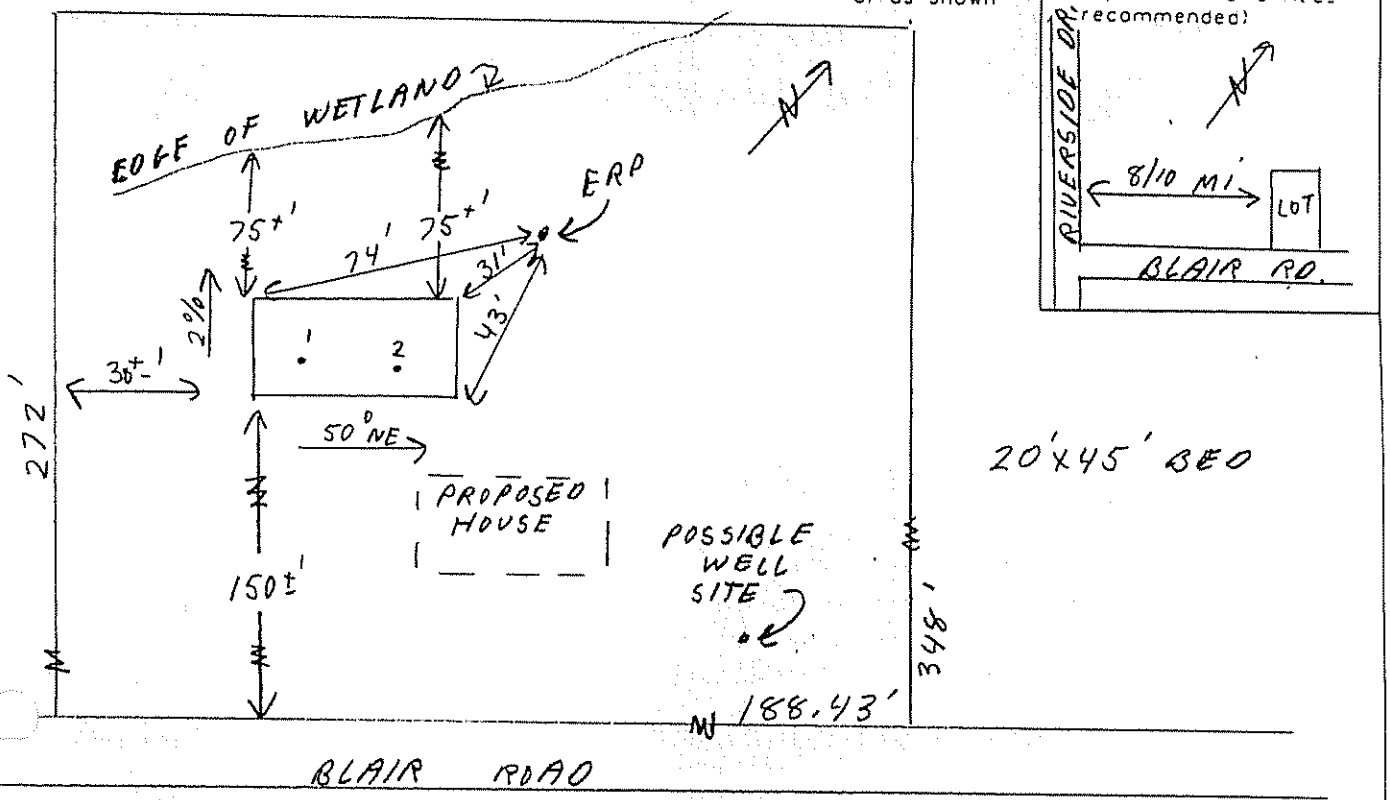

SITE LOCATION PLAN (Map from Maine Atlas recommended)

SOIL DESCRIPTION AND CLASSIFICATION (Location of Observation Holes Shown Above)

Observation Hole 1 — ☑ Test Pit ☐ Boring

2± Depth of Organic Horizon Above Mineral Soil

Depth below mineral soil surface (inches)	Texture	Consistency	Color	Mottling
0–10	SANDY LOAM	FRIABLE	DARK BR.	NONE
10–20	LOAMY SAND		YELLOW BR.	
20–30	FINE LOAMY SAND	FIRM	GRAY	COMMON DISTINCT
30–40				
40–50				

Soil Classification: Profile	Condition	Slope	Limiting Factor	
3	0	2 %	13"	☑ Ground Water ☑ Restrictive Layer ☐ Bedrock ☐ Pit Depth

Observation Hole 2 — ☑ Test Pit ☐ Boring

2± " Depth of Organic Horizon Above Mineral Soil

Depth below mineral soil surface (inches)	Texture	Consistency	Color	Mottling
0–10				
10–20	SAME AS #1			
20–30				
30–40				
40–50				

Soil Classification: Profile	Condition	Slope	Limiting Factor	
3	0	2 %	13"	☑ Ground Water ☑ Restrictive Layer ☐ Bedrock ☐ Pit Depth

Site Evaluator Signature: [signature] — SE # 256 — Date 9/23/04

SUBSURFACE WASTEWATER DISPOSAL SYSTEM APPLICATION

08246445

Town, City, Plantation	Street, Road, Subdivision	Owner's Name
AUGUSTA	BLAIR RD. LOT # 3	KEVIN KIRKWOOD

SUBSURFACE WASTEWATER DISPOSAL PLAN

Scale: 1" = 20 ft. or as shown

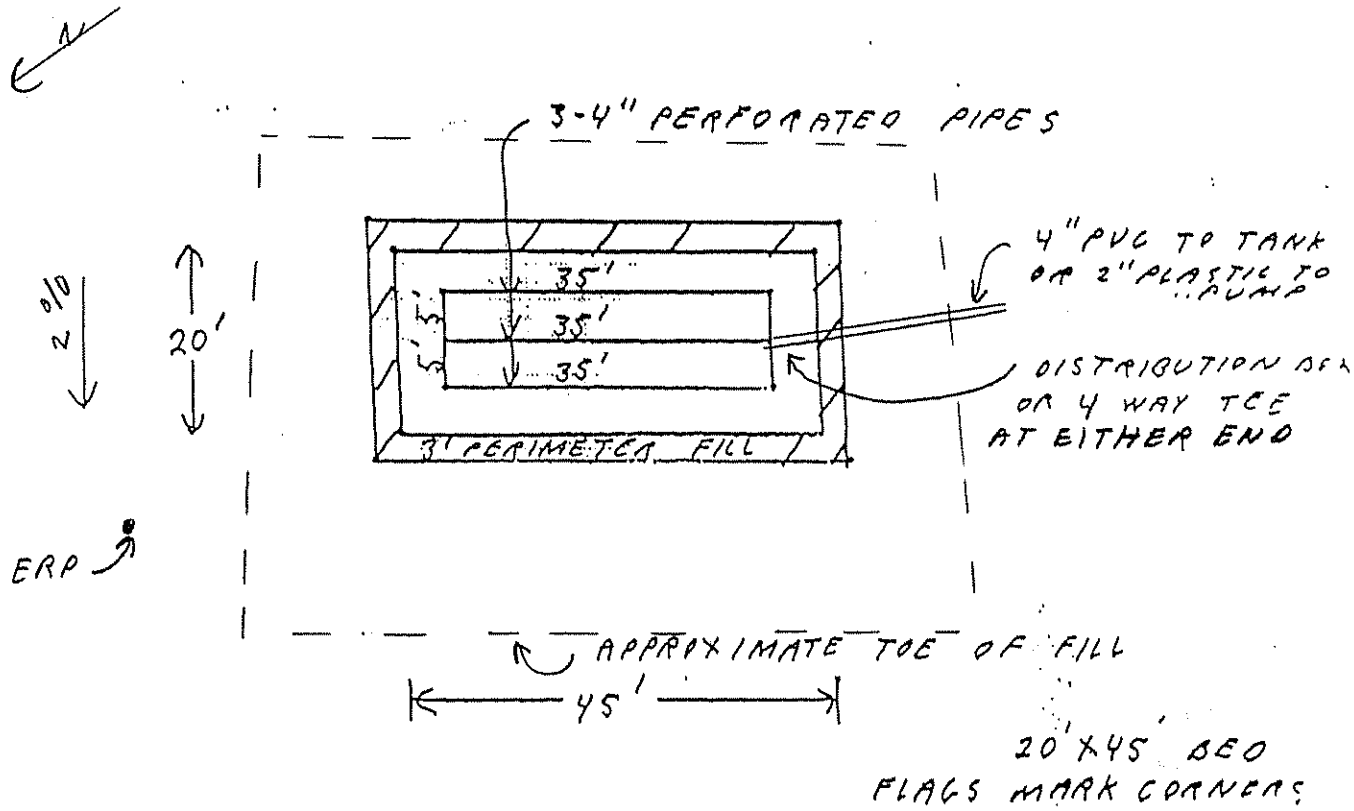

FILL REQUIREMENTS

Depth of Fill (Upslope) 29 "

Depth of Fill (Downslope) 34 "

CONSTRUCTION ELEVATION

Reference Elevation is 0 "

Bottom of Disposal Area -42 "

Top of Distribution Lines or Chambers -31 "

ELEVATION REFERENCE POINT

ERP IS IN 12" PINE 31' NORTH OF SYSTEM, 84" ABOVE GROUND

DISPOSAL AREA CROSS SECTION

Scale:

Vertical: 1 inch = 5 ft.

Horizontal: 1 inch = 10 ft.

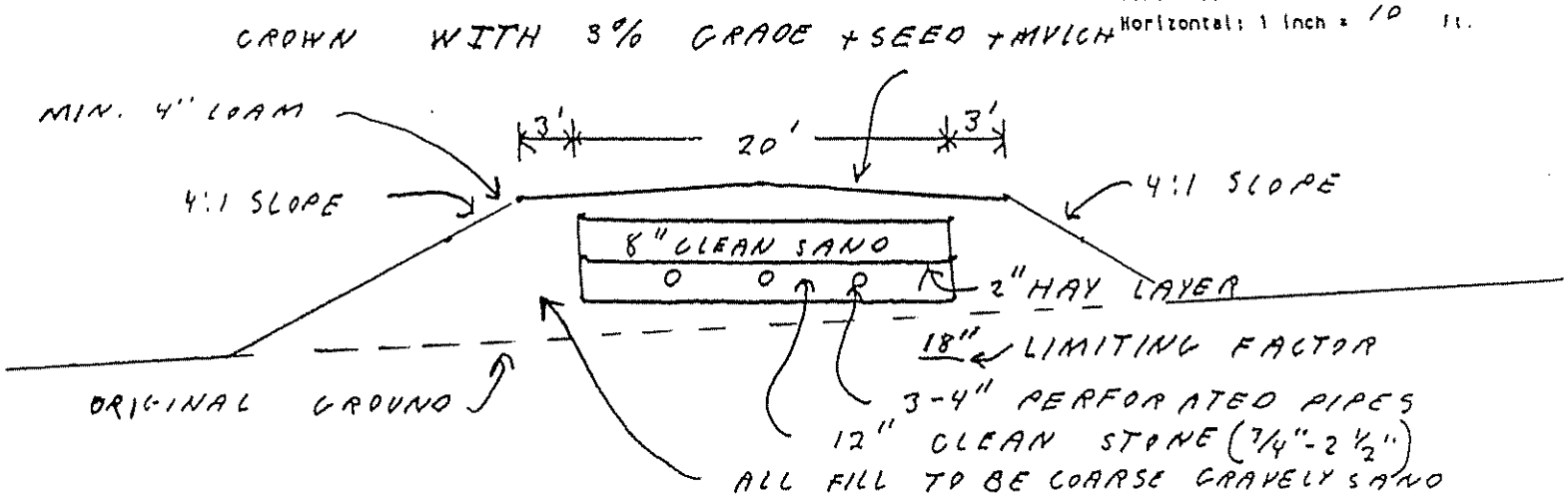

Site Evaluator Signature

256
SEN

9/23/04
Date

Approved for use as HHE 200 by Division of Health Engineering 9/57