Called 11-13-91 Scott Lyon 623-9320 M2L32
@ 11:25 AM

SUBSURFACE WASTEWATER DISPOSAL SYSTEM APPLICATION

Department of Human Services
Division of Health Engineering
(207)289-3826

PROPERTY ADDRESS

Town Or Plantation	Augusta
Street Subdivision Lot #	181 Riverside Drive

PROPERTY OWNERS NAME

Last: Priest First: Ken

Applicant Name:	Ken Priest
Mailing Address of Owner/Applicant (If Different)	S. Liberty Road, Palermo, me

AUGUSTA 2301 TOWN COPY

Date Permit Issued: 11 8 91 $ 60.00 FEE ☐ If Double Fee Charged

Local Plumbing Inspector Signature L.P.I. # 88 A

Owner/Applicant Statement

I certify that the information submitted is correct to the best of my knowledge and understand that any falsification is reason for the Local Plumbing Inspector to deny a Permit.

X Scott D Lyon
Signature of Owner/Applicant Date

Caution: Inspection Required

I have inspected the installation authorized above and found it to be in compliance with the Subsurface Wastewater Disposal Rules.

Local Plumbing Inspector Signature Date Approved

PERMIT INFORMATION

THIS APPLICATION IS FOR:
1. ■ NEW SYSTEM
2. ☐ REPLACEMENT SYSTEM
3. ☐ EXPANDED SYSTEM
4. ☐ EXPERIMENTAL SYSTEM

SEASONAL CONVERSION
to be completed by the LPI
5. ☐ SYSTEM COMPLIES WITH RULES
6. ☐ CONNECTED TO SANITARY SEWER
7. ☐ SYSTEM INSTALLED – P# _____
8. ☐ SYSTEM DESIGN RECORDED AND ATTACHED

IF REPLACEMENT SYSTEM:
YEAR FAILING SYSTEM INSTALLED _____
THE FAILING SYSTEM IS:
1. ☐ BED 3. ☐ TRENCH
2. ☐ CHAMBER 4. ☐ OTHER: _____

SIZE OF PROPERTY	ZONING
49 Acres	Residential

THIS APPLICATION REQUIRES:
1. ■ NO RULE VARIANCE
2. ☐ NEW SYSTEM VARIANCE Attach New System Variance Form
3. ☐ REPLACEMENT SYSTEM VARIANCE Attach Replacement System Variance Form
a. ☐ Requiring Local Plumbing Inspector Approval
b. ☐ Requires State and Local Plumbing Inspector Approval
4. ☐ MINIMUM LOT SIZE VARIANCE

DISPOSAL SYSTEM TO SERVE:
1. ☐ SINGLE FAMILY DWELLING
2. ☐ MODULAR OR MOBILE HOME
3. ☐ MULTIPLE FAMILY DWELLING
4. ■ OTHER Fiberglass Mfg. Bldg
SPECIFY

INSTALLATION IS:
COMPLETE SYSTEM
1. ■ NON-ENGINEERED SYSTEM
2. ☐ PRIMITIVE SYSTEM (Includes Alternative Toilet)
3. ☐ ENGINEERED (+2000 gpd)
INDIVIDUALLY INSTALLED COMPONENTS:
4. ☐ TREATMENT TANK (ONLY)
5. ☐ HOLDING TANK _____ GAL
6. ☐ ALTERNATIVE TOILET (ONLY)
7. ☐ NON-ENGINEERED DISPOSAL AREA (ONLY)
8. ☐ ENGINEERED DISPOSAL AREA (ONLY)
9. ☐ SEPARATED LAUNDRY SYSTEM

TYPE OF WATER SUPPLY
CITY

DESIGN DETAILS (SYSTEM LAYOUT SHOWN ON PAGE 3)

TREATMENT TANK
1. ■ SEPTIC: ■ Regular ■ Low Profile
2. ☐ AEROBIC
SIZE: 1000 GALS.

WATER CONSERVATION
1. ■ NONE
2. ☐ LOW VOLUME TOILET
3. ☐ SEPARATED LAUNDRY SYSTEM
4. ☐ ALTERNATIVE TOILET
SPECIFY: _____

PUMPING
1. ☐ NOT REQUIRED
2. ■ MAY BE REQUIRED (DEPENDING ON TREATMENT TANK LOCATION AND ELEVATION)
3. ☐ REQUIRED
DOSE: as Required GALS.

CRITERIA USED FOR DESIGN FLOW (BEDROOMS, SEATING, EMPLOYEES, WATER RECORDS, ETC.)
Manufacturing Bldg.
25 employees
at 15GPD/Person.
without Showers

DESIGN FLOW: 375 (GALLONS/DAY)

SOIL CONDITIONS USED FOR DESIGN PURPOSES

PROFILE	CONDITION
3	A111

DEPTH TO LIMITING FACTOR: 17

SIZE RATINGS USED FOR DESIGN PURPOSES
1. ☐ SMALL
2. ☐ MEDIUM
3. ■ MEDIUM-LARGE
4. ☐ LARGE
5. ☐ EXTRA LARGE

DISPOSAL AREA TYPE/SIZE
1. ■ BED 1240 Sq. Ft.
2. ☐ CHAMBER _____ Sq. Ft.
☐ REGULAR ☐ H-20
3. ☐ TRENCH _____ Linear Ft.
4. ☐ OTHER: _____

SITE EVALUATOR STATEMENT

On 4-4-91 (date) I conducted a site evaluation for this project and certify that the data reported is accurate. The system I propose is in accordance with the Subsurface Wastewater Disposal Rules.

Stephen H Good — Site Evaluator Signature
252 — SE#
4-4-91 — Date

(Local Plumbing Inspector's Signature if permit is for Seasonal Conversion.)

SUBSURFACE WASTEWATER DISPOSAL SYSTEM APPLICATION

Department of Human Services
Division of Health Engineering

Town, City, Plantation	Street, Road, Subdivision	Owners Name
Augusta	Riverside Drive	Ken Priest

SITE PLAN

Scale 1" = 400' Ft.

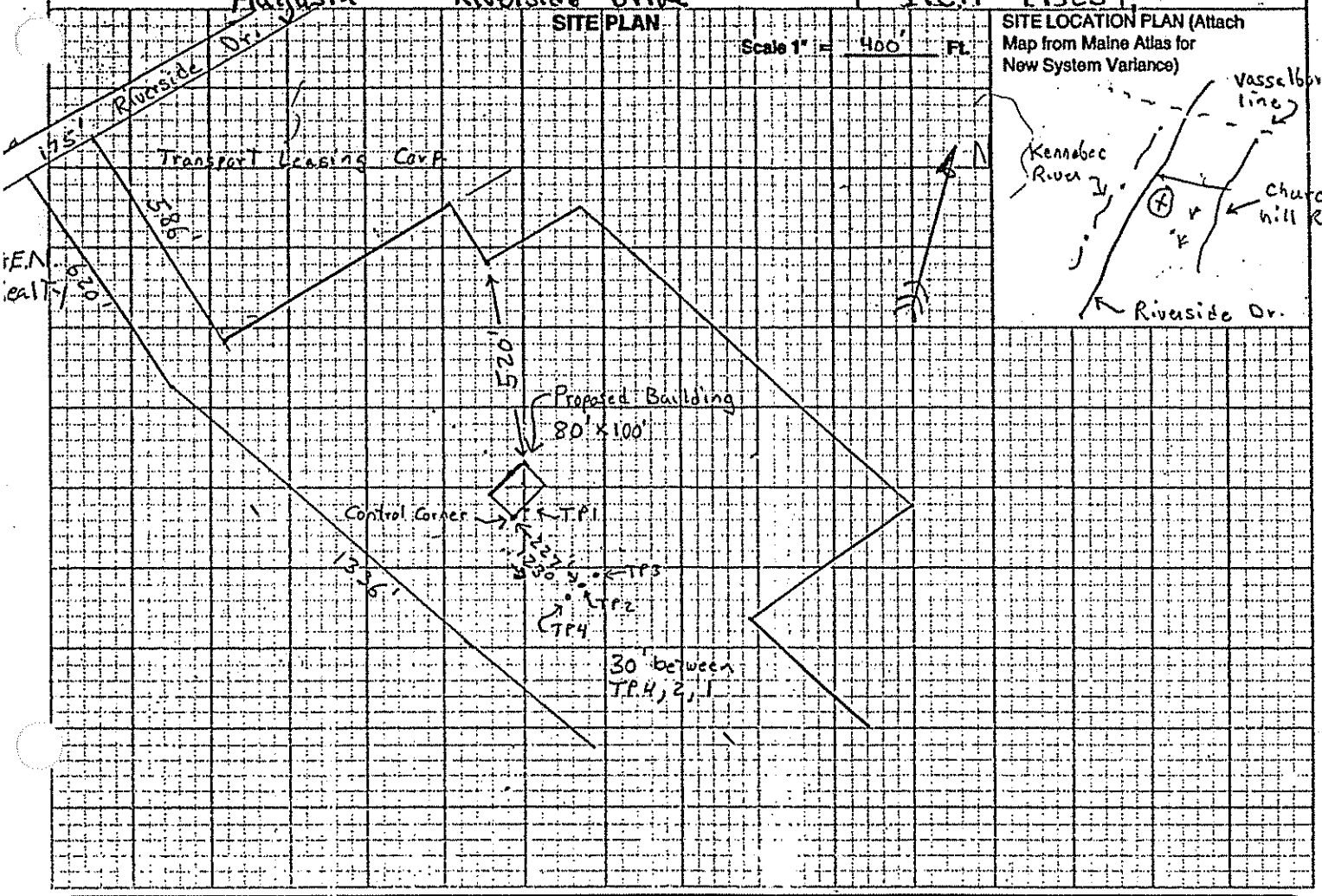

SOIL DESCRIPTION AND CLASSIFICATION (Location of Observation Holes Shown Above)

Observation Hole TP2 ■ Test Pit ☐ Boring

3" Depth of Organic Horizon Above Mineral Soil

DEPTH BELOW MINERAL SOIL SURFACE (Inches)

Texture	Consistency	Color	Mottling
Sandy loam	Friable	10YR 3/3	None
		10YR 5/4	
		10YR 4/4	
		5Y 5/3	common distinct
	Firm		
		2.5Y 4/4	

G2

Soil Profile	Classification Condition	Slope	Limiting Factor	
3	C	2 %	18"	■ Ground Water ☐ Restrictive Layer ☐ Bedrock

Observation Hole TP3 ■ Test Pit ☐ Boring

3" Depth of Organic Horizon Above Mineral Soil

DEPTH BELOW MINERAL SOIL SURFACE (Inches)

Texture	Consistency	Color	Mottling
Sandy loam	Friable	10YR 3/3	None
		10YR 4/4	
	Firm	2.5Y 4/4	common distinct
		5Y 4/4	
	Bedrock		

Soil Profile	Classification Condition	Slope	Limiting Factor	
3	AIII	4 %	17"	■ Ground Water ☐ Restrictive Layer ☐ Bedrock

Stephen H Good
Site Evaluator Signature

252
SE#

8-9-90
Date

SUBSURFACE WASTEWATER DISPOSAL SYSTEM APPLICATION

Department of Human Services
Division of Health Engineering

Town, City, Plantation	Street, Road, Subdivision	Owners Name
Augusta	Riverside Drive	Ken Priest

SITE PLAN Scale 1" = _____ Ft.

SITE LOCATION PLAN (Attach Map from Maine Atlas for New System Variance)

SOIL DESCRIPTION AND CLASSIFICATION (Location of Observation Holes Shown Above)

Observation Hole TP4 ■ Test Pit ☐ Boring

4 * Depth of Organic Horizon Above Mineral Soil

DEPTH BELOW MINERAL SOIL SURFACE (Inches)

Depth	Texture	Consistency	Color	Mottling
0–6	Sandy loam	friable	10YR 3/3	None
6–10			10YR 4/4	
10–15			2.5Y 4/4	
15–20		Firm		common distinct
20–30			5Y 4/4	
30–54				

Soil Profile	Classification Condition	Slope	Limiting Factor	
2	C	4 %	20"	■ Ground Water ☐ Restrictive Layer ☐ Bedrock

Observation Hole TP1 ■ Test Pit ☐ Boring

3 * Depth of Organic Horizon Above Mineral Soil

DEPTH BELOW MINERAL SOIL SURFACE (Inches)

Depth	Texture	Consistency	Color	Mottling
0–6	Sandy loam	friable	10YR 3/3	None
6–10			10YR 4/6	
10–15			10YR 4/4	
15–20			2.5Y 4/4	
20–30		Firm	5Y 4/3	common distinct
30–80				

Soil Profile	Classification Condition	Slope	Limiting Factor	
3	C	8 %	34"	■ Ground Water ■ Restrictive Layer ☐ Bedrock

Stephen H Good
Site Evaluator Signature

252
SE#

8-9-90
Date

SUBSURFACE WASTEWATER DISPOSAL SYSTEM APPLICATION

Department of Human Services
Division of Health Engineering

Town, City, Plantation	Street, Road, Subdivision	Owners Name
Augusta	Riverside Drive	Ken Priest

SUBSURFACE WASTEWATER DISPOSAL PLAN

Scale 1" = 20 Ft.

* CONTRACTORS: SEE ENCLOSED CHECKLIST BEFORE INSTALLATION
* NOTE: PUMP TO BE SIZED BY CONTRACTOR IF PUMPING IS REQUIRED
* USE 45 DEGREE SWEEPS WHEN MAKING 90 DEGREE TURN IN EFFLUENT LINE

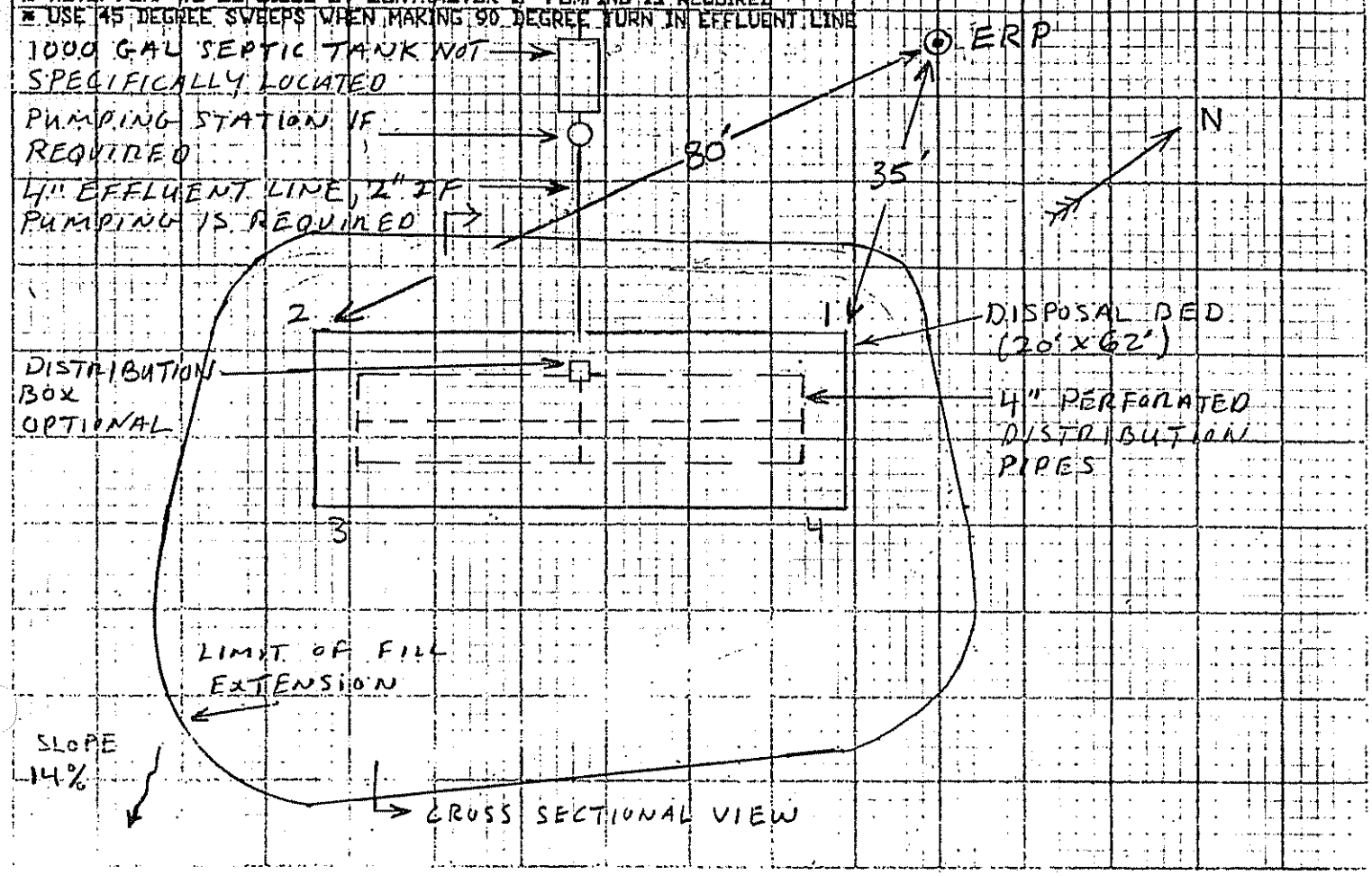

FILL REQUIREMENTS		CONSTRUCTION ELEVATIONS		ELEVATION REFERENCE POINT LOCATION & DESCRIPTION
Depth of Fill (Upslope)	36"	Reference Elevation is	0	NAIL AND SHINER
Depth of Fill (Downslope)	48"	Bottom of Disposal Area	-43	ON 12" OAK
		Top of Distribution Lines or Chambers	-32	

DISPOSAL AREA CROSS SECTION

Scale:
Vertical: 1 Inch = 5 Ft.
Horizontal: 1 Inch = 10 Ft.

Fill to be loamy sand placed in 8 inch lifts and compacted as placed.

crown with 3% grade

1. septic tank minimum distance from
   100 feet from wells
   8 feet from building
2. disposal field minimum distance from
   20 feet from buildings
   100 feet from wells

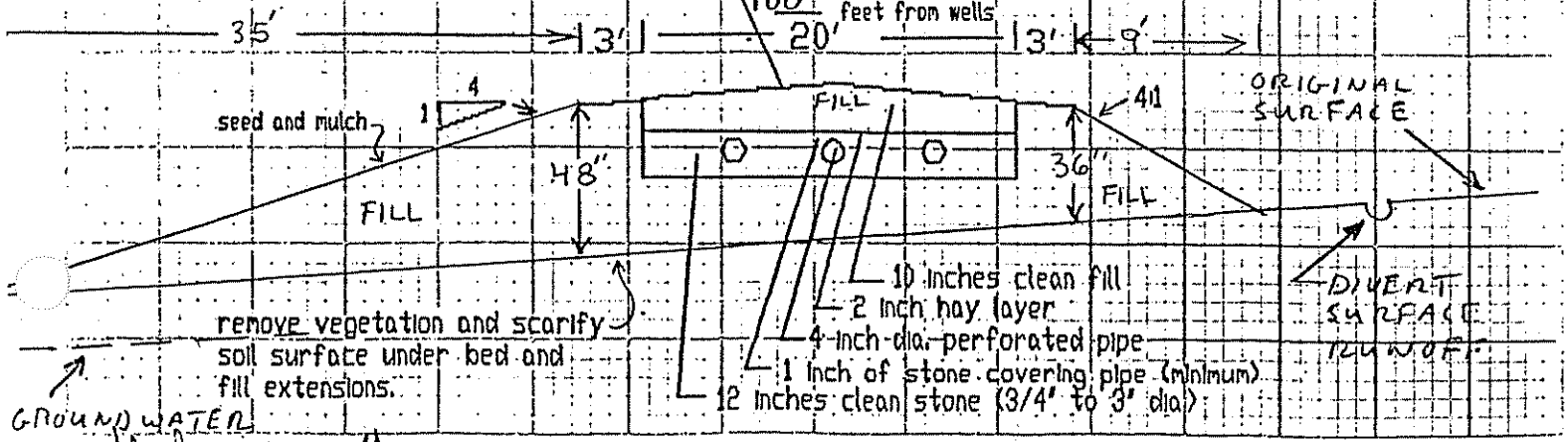

Stephen H Good — Site Evaluator Signature

252 — SE#

4-8-91 — Date

HHE-200 Rev.1/84