OK

SUBSURFACE WASTEWATER DISPOSAL SYSTEM APPLICATION

Department of Human Services
Division of Health Engineering
(207) 287-5672 FAX (207) 287-4172

PROPERTY LOCATION

Town or Plantation: AUGUSTA

Street Subdivision Lot #: WILSON ST

AUGUSTA 4051 TOWN COPY

Date Permit Issued: 1/13/98 $ 175.00 FEE ☐ If Double Fee Charged

L.P.I. # 150

Local Plumbing Inspector Signature

PROPERTY OWNER'S NAME

Last: FIRST First: UNITE PENTECOSTAL

Applicant's Name: SAME

Mailing Address of Owner: RS 8-7700 AUGUSTA, ME.

Daytime Tel. #:

Municipal Tax Map #: 1 Lot #: 179

Owner Statement

I state that the information submitted is correct to the best of my knowledge and understand that any falsification is reason for the Department and/or Local Plumbing Inspector to deny a permit

Signature of Owner/Applicant: [signature] Date: 10-9-97

Caution: Inspection Required

I have inspected the installation authorized above and found it to be in compliance with the Subsurface Wastewater Disposal Rules. Approved as:

Local Plumbing Inspector Signature: Ruff Inspector ID Date Approved: 12/8/98 GRF

PERMIT INFORMATION

TYPE OF APPLICATION:

1. ☐ First Time System
2. ☑ Replacement System
   Type Replaced ?
   Year Installed ?
3. ☐ Expanded System
   ☐ a. one time exempted
   ☐ b. non exempted
4. ☐ Experimental System
5. ☐ Seasonal Conversion

THIS APPLICATION REQUIRES:

1. ☑ No Rule Variance
2. ☐ First Time System Variance
   ☐ a. Local Plumbing Inspector approval
   ☐ b. State & Local Plumbing Inspector approval
3. ☐ Replacement System Variance
   ☐ a. Local Plumbing Inspector approval
   ☐ b. State & Local Plumbing Inspector approval
4. ☐ Minimum Lot Size Variance
5. ☐ Seasonal Conversion Approval

DISPOSAL SYSTEM COMPONENT(S)

1. ☐ Non-Engineered System
2. ☐ Primitive System (graywater & pit toilet)
3. ☐ Alternative Toilet
4. ☐ Non-Engineered Treatment Tank
5. ☐ Holding Tank ____ Gallons
6. ☑ Non-Engineered Disposal Area (only)
7. ☐ Separated Laundry System
8. ☐ Engineered System (>2000 gpd)
9. ☐ Engineered Treatment Tank (only)
10. ☐ Engineered Disposal Area (only)
11. ☐ Pretreatment

SIZE OF PROPERTY

5 ± AC.

SHORELAND ZONING

☐ Yes ☑ No

DISPOSAL SYSTEM TO SERVE:

1. ☑ Single Family Dwelling Unit
2. ☐ Multiple Family Dwelling: Number of Units ____
3. ☐ Other ____

TYPE OF WATER SUPPLY

PRIVATE

DESIGN DETAILS (SYSTEM LAYOUT SHOWN ON PAGE 3)

TREATMENT TANK

1. ☐ Concrete
   ☐ a. Regular
   ☐ b. Low Profile
2. ☐ Plastic
3. ☐ Other EXISTING

SIZE 1,000 Gallons

DISPOSAL AREA TYPE / SIZE

1. ☑ Bed 1,200 Sq. Ft.
2. ☐ Proprietary Device ____ Sq. Ft.
   ☐ Cluster ☐ Linear
   ☐ Regular ☐ H-20
3. ☐ Trench
4. ☐ Other ____

GARBAGE DISPOSAL UNIT

1. ☑ No
2. ☐ Yes
   ☐ Multi-compartment tank
   ☐ Tank in series
   ☐ Increase in tank capacity
   ☐ Filter on tank outlet

CRITERIA USED FOR DESIGN FLOW (Show Calculations)

4 BEDROOM

PROFILE & DESIGN CLASS

PROFILE	DESIGN
3	C

DEPTH TO MOST LIMITING FACTOR 24"

DISPOSAL AREA SIZING

1. ☐ Small - 2.00
2. ☐ Medium - 2.60
3. ☑ Medium-Large - 3.30
4. ☐ Large - 4.10
5. ☐ Extra-Large - 5.20

PUMPING

1. ☐ Not required
2. ☐ May be required
3. ☑ Required

DOSE 50 Gallons

DESIGN FLOW 360 GPD (Gallons/Day)

SITE EVALUATOR'S STATEMENT

On 5/23/98 (date) I completed a site evaluation on this property and state that the data reported is accurate and that the proposed system is in compliance with the Subsurface Wastewater Disposal Rules.

Site Evaluator Signature: [signature] SE # 256 Date: 9/25/98

Site Evaluator Name Printed: JOHN PHILBRICK Telephone: 547-3732

SUBSURFACE WASTEWATER DISPOSAL SYSTEM APPLICATION

09278739

Town, City, Plantation	Street, Road, Subdivision	Owner's Name
AUGUSTA	WILSON ST.	FIRST UNITED PENTECOSTAL

SITE PLAN

Scale: 1" = 50 Ft. or as shown

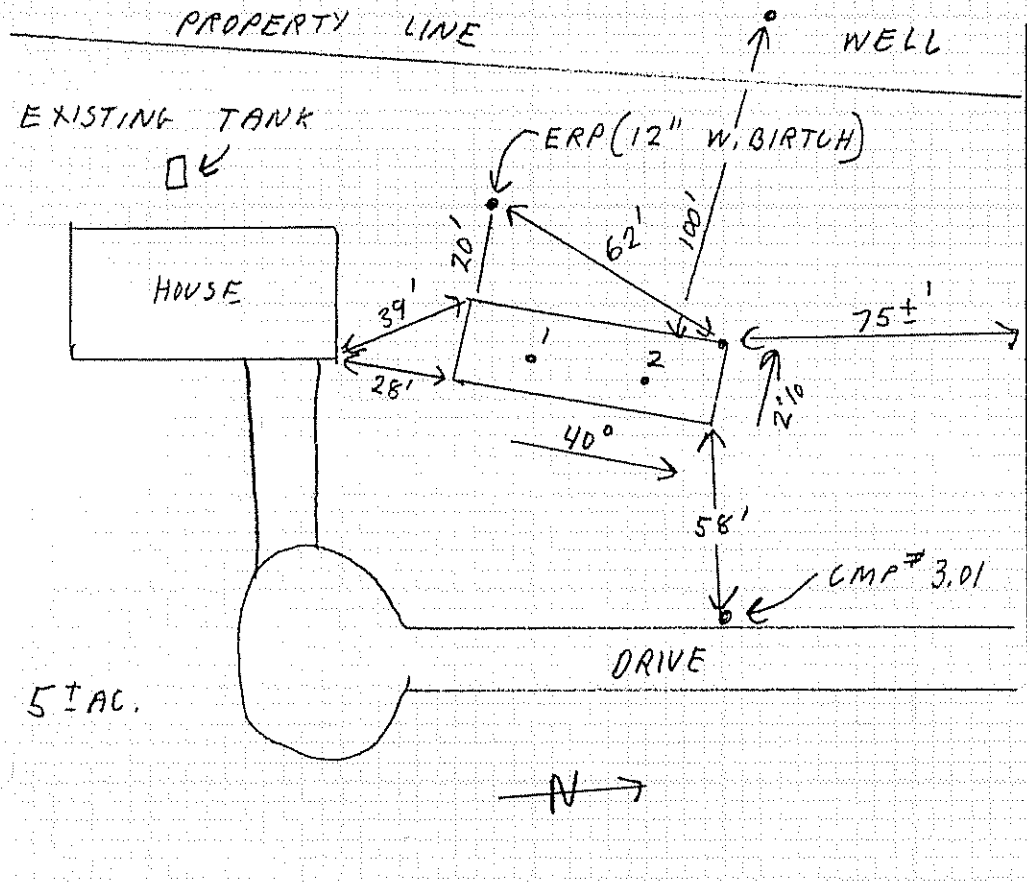

SITE LOCATION PLAN
(Attach Map from Maine Atlas for New System Variance)

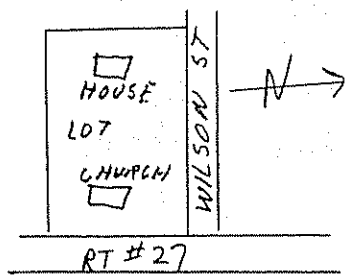

20'x60' BED
FLAGS MARK
CORNERS

SOIL DESCRIPTION AND CLASSIFICATION

(Location of Observation Holes Shown Above)

Observation Hole 1 ☑ Test Pit ☐ Boring

0 " Depth of Organic Horizon Above Mineral Soil

Inches	Texture	Consistency	Color	Mottling
0	LOAMY	FRIABLE	TAN	NONE
6	SAND			
10	FILL			
15	SANDY		DARK	
	LOAM		BR.	
20			YELLOW BR.	
	LOAMY			
	SAND	FIRM	GRAY	COMMON
30				DISTINCT
40				
50				

Soil Profile	Classification Condition	Slope %	Limiting Factor	
3	C	2	24"	☑ Ground Water ☑ Restr. Layer ☐ Bedrock

Observation Hole 2 ☐ Test Pit ☑ Boring

0 " Depth of Organic Horizon Above Mineral Soil

Inches	Texture	Consistency	Color	Mottling
0				
6				
10				
15				
20		SAME AS #1		
30				
40				
50				

Soil Profile	Classification Condition	Slope %	Limiting Factor	
				☐ Ground Water ☐ Restr. Layer ☐ Bedrock

Site Evaluator Signature

SE# 256

Date 9/25/98

Approved for use as HHE 200 by Division of Health Engineering 9/87

SUBSURFACE WASTEWATER DISPOSAL SYSTEM APPLICATION

05067453

Town, City, Plantation	Street, Road, Subdivision	Owner's Name
AUGUSTA	WILSON ST.	FIRST UNITED PENTECOSTAL

SUBSURFACE WASTEWATER DISPOSAL PLAN

Scale: 1" = 20 Ft. or as shown

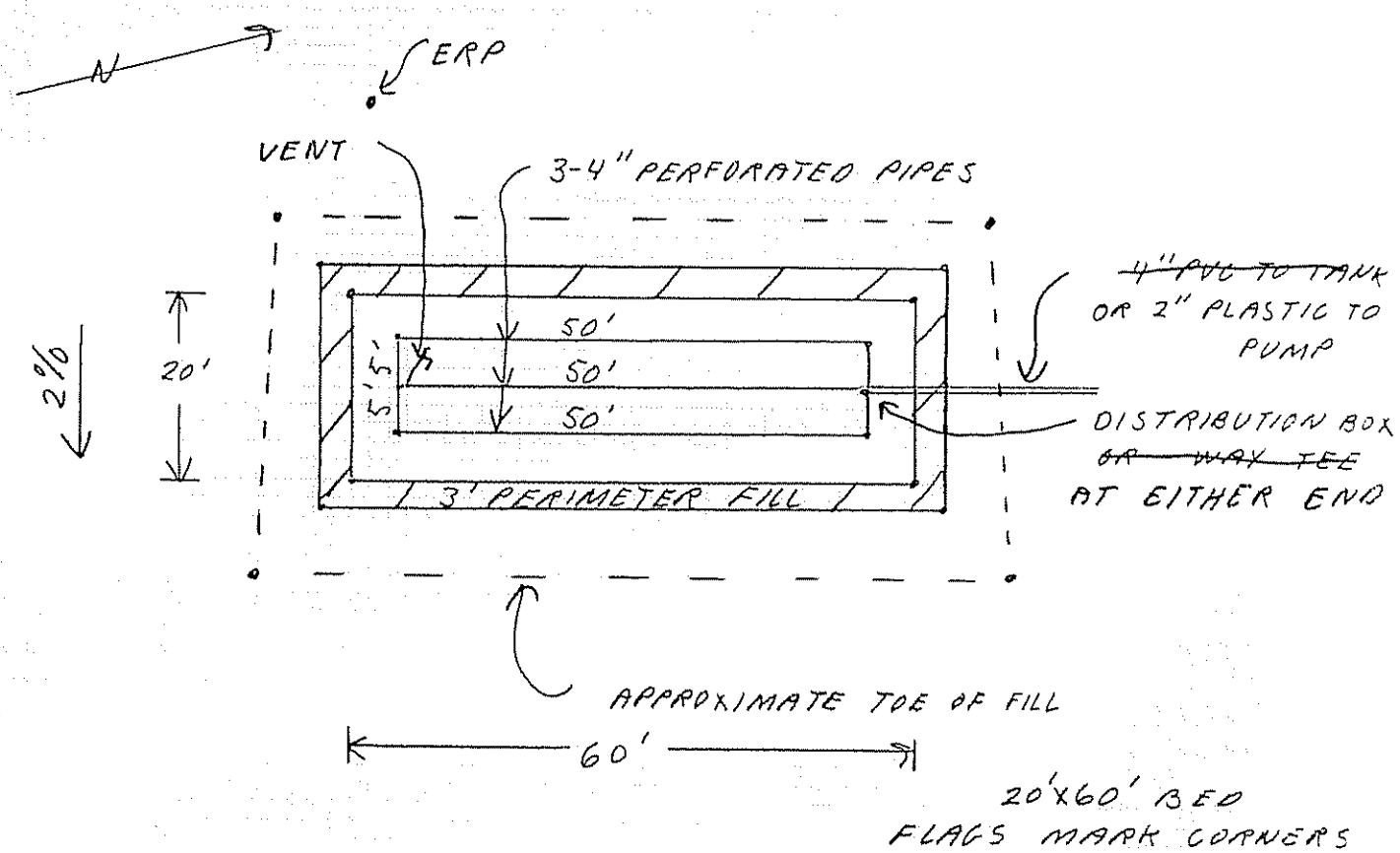

20'x60' BED
FLAGS MARK CORNERS

FILL REQUIREMENTS
Depth of Fill (Upslope) 12 "
Depth of Fill (Downslope) 12 "

CONSTRUCTION ELEVATION
Reference Elevation is 0"
Bottom of Disposal Area -48"
Top of Distribution Lines or Chambers -37"

ELEVATION REFERENCE POINT
ERP IN 12"W. BIRCH, 20' WEST OF SYSTEM, 68" ABOVE GROUND

DISPOSAL AREA CROSS SECTION

Scale:
Vertical: 1 inch = 5 Ft.
Horizontal: 1 inch = 10 Ft.

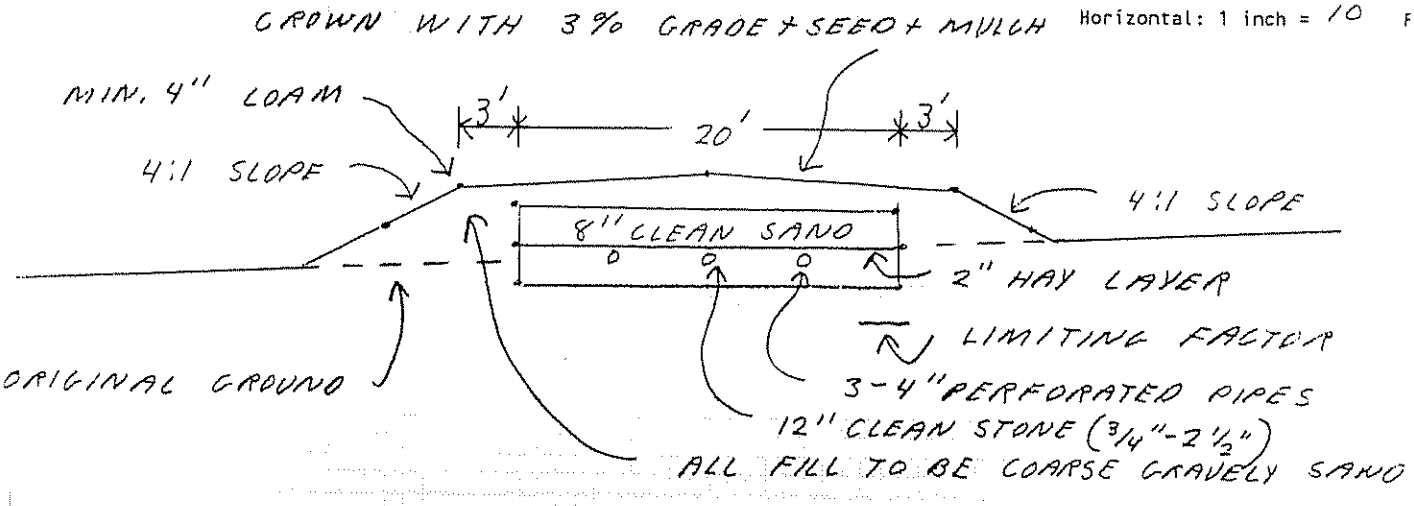

Site Evaluator Signature

256
SE#

9/25/98
Date

Approved for use as HHE 200 by Division of Health Engineering 9/87