Violette, Paul

Original to be sent to Division of Health Engineering, Augusta, Maine 04333 by the LPI

This Application Is For: ○ New System ○ Expanded System ○ Conversion Permit ○ Experimental System ○ Replacement Of Entire System ☒ Disposal Area Only

An Application For Subsurface Wastewater Disposal Permit

This Is NOT A Permit; This Form When Completed Must Be Presented To The Local Plumbing Inspector To Obtain A Permit

Town	Street, Road, Etc. / If On Water Body, Give Name	Plumbing Permit No.	Date Of Plumbing Permit
Augusta	10 Easy ST	23005 EP	1-10-80

Owner Of Property	Tel. No	Name Of Applicant / Owner's Agent	Tel. No
Paul Violette	623-7035		

Street	Street
10 Easy St. RFD4	

Town	State	Zip Code	Town	State	Zip Code
Augusta	Maine				

Owner's Signature	Date	Applicants Signature	Date
x Paul F. Violette F.V.	1-10-80		

Size Of Lot	Is Lot Zoned?	Type Of Zoning	Subdivision Name	Lot No
100x207 ○ Sq. Feet ○ Acres	○ Yes ☒ No			

The Water Supply For This Property Is: ○ Dug Well, depth ____ ○ Drilled Well, depth ____ ○ Spring, depth ____

Surface water ○ Body ○ Course—○ with disinfection, ○ without disinfection Public Utility, name ____

SITE INVESTIGATION

Snow Location Of Pits on Site Plan on Page 2

	Soil Profile No. 1 ☐ Pit ☒ Boring	Soil Profile No. ☐ Pit ☐ Boring	Soil Profile No. ☐ Pit ☐ Boring	Soil Profile No. ☐ Pit ☐ Boring
Organic Strata	+1"			
Thickness and description of each soil stratum: 1st Strata	Sandy fill 6 inches	1st Strata inches	1st Strata inches	1st Strata inches
2nd Strata	Brown Loamy Sand 6 inches	2nd Strata inches	2nd Strata inches	2nd Strata inches
3rd Strata	Red Brown Sand 40 inches	3rd Strata inches	3rd Strata inches	3rd Strata inches
4th Strata	Gray Brown Sand 6 inches	4th Strata inches	4th Strata inches	4th Strata inches
Depth from bottom of organic horizon to: Total Depth of Observation Hole Inches	58	Total Depth of Observation Hole Inches	Total Depth of Observation Hole Inches	Total Depth of Observation Hole Inches
Max. Seasonal Water Table Mottling	○ None Evident 40 Inches	Max. Seasonal Water Table Mottling ○ None Evident Inches	Max. Seasonal Water Table Mottling ○ None Evident Inches	Max. Seasonal Water Table Mottling ○ None Evident Inches
Impervious Layer Clay, Etc.	☒ None Evident Inches	Impervious Layer Clay, Etc. ○ None Evident Inches	Impervious Layer Clay, Etc. ○ None Evident Inches	Impervious Layer Clay, Etc. ○ None Evident Inches
Bedrock	☒ None Evident Inches Type of Bedrock	Bedrock ○ None Evident Inches Type of Bedrock	Bedrock ○ None Evident Inches Type of Bedrock	Bedrock ○ None Evident Inches Type of Bedrock
Surface Slope	2 %	Surface Slope %	Surface Slope %	Surface Slope %
Soil Group / Soil Condition	5 / C			
Per Table 9-1 Code II				

On 12/5/79 (date), a site investigation for this project was completed. I conducted this soil evaluation and certify that the results indicated above best represent the soil conditions found. I recommend the following type and size of private sewage disposal system. I also recommend the proposed private sewage disposal system layout and location shown on page 2.

Signature: Allen W. Rider Jr.

Date Signed: 12/5/79

Site Evaluator License Number: 51

DISPOSAL SYSTEM PROPOSED

Show Location of System and Details on Disposal Plan on Page 2

SYSTEM:
- ☒ Combined System
- ○ Separated System

If separated system—type of human waste disposal system to be used:
- ○ Sealed Vault Privy
- ○ Open Pit Privy
- ○ Compost Toilet
- ○ Chemical Toilet
- ○ Incinerator Toilet

TREATMENT TANK
- ○ Aerobic Tank
- ☒ Septic Tank
- ☒ Concrete
- ○ Fiberglass
- ○ Metal

Size in Gallons: use existing 1000 Gal.

Number of Bedrooms: 3

SUBSURFACE ABSORPTION AREA/TYPE
- ☒ Bed System No. of Beds 1 Length 40 ft Width 20 ft
- ○ Chamber System Number ____
- ○ Type A ○ Type B ○ Single File ○ Cluster
- ○ Special System Length ____ ft Width ____ ft
- ○ Laundry System No. of Chambers: Type A ____ Type B ____

Name and type of establishment if other than private home

SIZE
- ○ Small
- ☒ Medium
- ○ Med.-Large
- ○ Large
- ○ Extra-Large

Design Flow: 2.14 GPD

SITE MODIFICATION

Fill will be: 2 in uphill 6 in downhill

DETAILS
- ○ A Distribution Box is required
- Pumping is—○ required ☒ is not required
- The dose will be ____ Gallons

DISTANCES Exact Location Unknown

○ Yes ☒ No: The proposed subsurface absorption area will be located at least 100 feet from any and all wells, springs, surface water bodies and courses (lake, pond, ocean, brook, stream, river), swamps, marshes, and bogs.

☒ Yes ○ No: The proposed subsurface absorption area will be located at least 300 feet from any and all wells and springs producing 2000 gallons or more of water per day, and any public water supplies.

PROPERTY/LOT LOCATION MAP

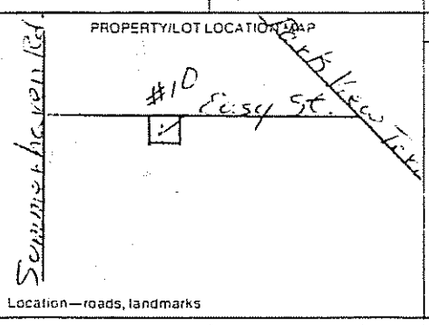

Location—roads, landmarks

WAIVER ○ State Variance Required ☒ Replacement Variance Required ○ None Required

FOR THE USE OF LPI ONLY

○ Denial: Application is denied for the following reasons, portions of the Code II are cited.
Form is incomplete (____ pg.) as to ○ General info. ○ Site Investigation ○ System Proposed, ○ Site Plan, ○ Disposal System Plan, ○ Cross Section, ○ Statement. See section 4.1
○ Site Investigation indicates site is ○ unsuitable for disposal system ○ Unsuitable for system proposed.
○ System Proposed does not conform to Code ____
○ Site Investigation indicates site modifications are necessary
☒ Acceptance: Application for permit is approved ☒ with condition specified, comply with Section WELL LOCATION LESS THEN 100 Feet BUT NOT CLOSER THAN 75
○ without condition

Signed LPI: Richard P. Baker Date: 1-10-80

HHE 200 1/78

APPLICATION FOR SUBSURFACE WASTEWATER DISPOSAL PERMIT

(For systems disposing of less than 2000 gallons per day)

Town: Augusta | Street, Road, etc.: 70 Easy St. | If on water body, give name | Owner of Property: Paul Violette

Site Plan — Scale 1" = 50 ft.

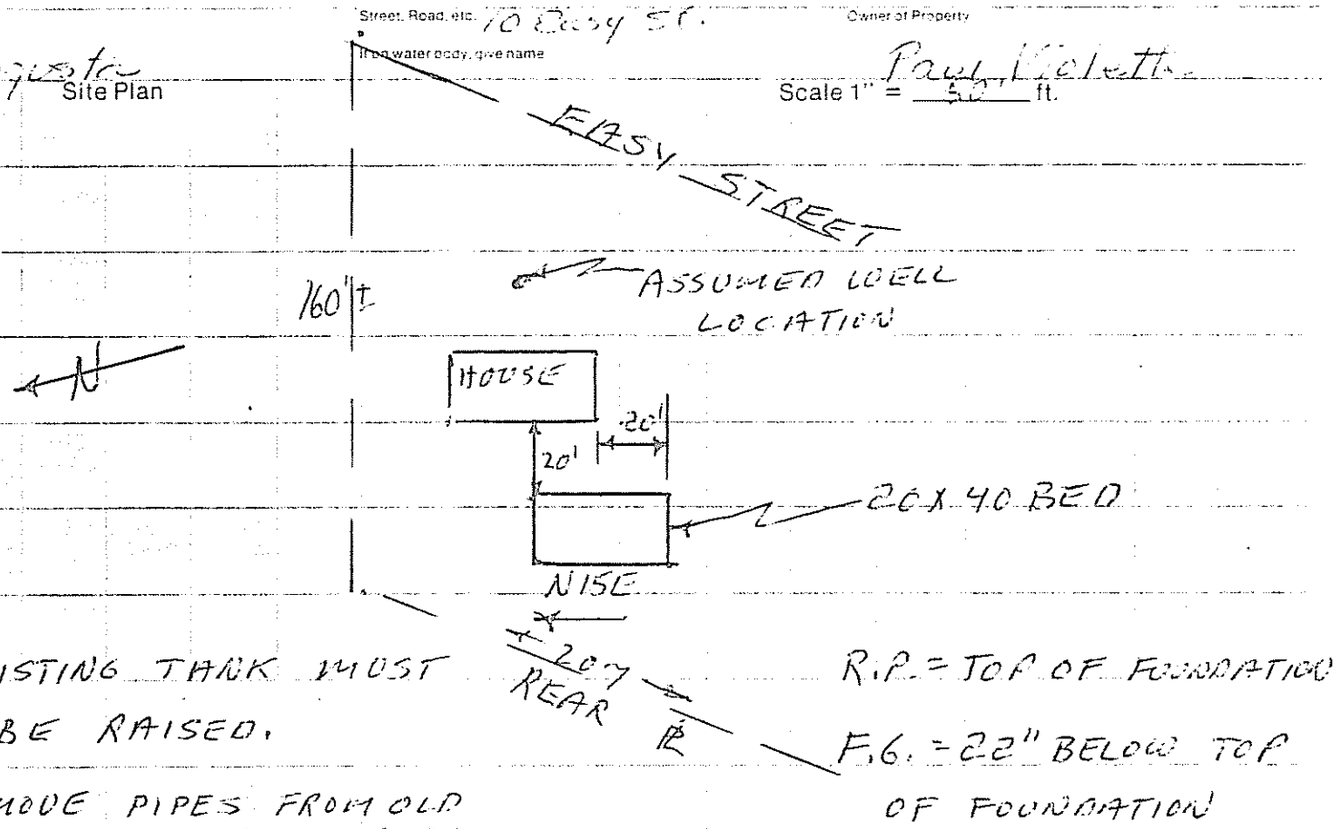

● Designates Elevation Reference Point ○ Designates Test Pit

Private Sewage Disposal Plan — Scale 1" = 20' or _____

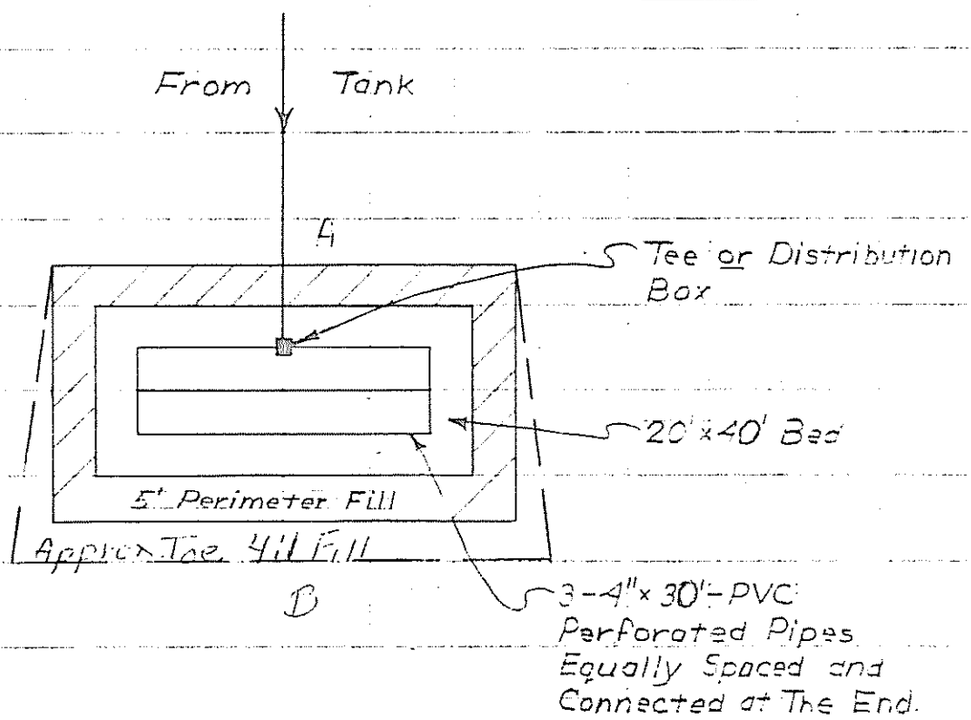

Subsurface Absorption Area Cross-section — Scale: Vertical—1" = 5' or _____ Horizontal—1" = ▩ or 10'

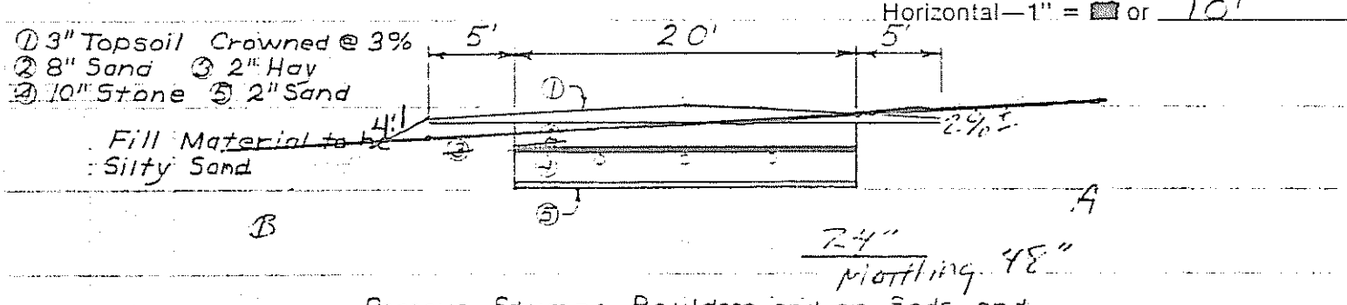

Remove Stumps, Boulders and or Sods and Scarify Surface Before Fill is Placed.

Site Evaluators Signature: [signature] Date: 12/5/79 License Number: 51

HHE-200 1/78

Statement: (no permit may be issued unless signed)

I certify that all the information submitted to be true and correct; and I understand that issuance of a permit is based upon the information and plans submitted by the applicant. I also understand that any falsification of this application is reason to deny a permit to install a private sewage disposal system and that the permit is valid for a six (6) month period from the date of permit issuance. I understand that no guarantee is intended or implied by reason of any advice or approval given by the Administrative Authority or its agent.

Signature Required

Date: 1-10-80

Applicant: _____

Owner: X Paul F. Violette F.V.