85005A

Department of Human Services
Division of Health Engineering
(207) 289-3826

SUBSURFACE WASTEWATER DISPOSAL SYSTEM APPLICATION

PROPERTY ADDRESS

Town Or Plantation	Augusta
Street Subdivision Lot #	1027 Summerhaven Road

PROPERTY OWNERS NAME

Last: Michaud First: Patrick D.

Applicant Name:	Patrick D. Michaud
Mailing Address of Owner/Applicant (If Different)	RFD 4, Box 1176 Augusta, Maine 04330

AUGUSTA PERMIT # 520 TOWN COPY

Date Permit Issued: 7-30-85 $ 10 FEE ☐ If Double Fee Charged

Local Plumbing Inspector Signature L.P.I. # 1759

Owner/Applicant Statement

I certify that the information submitted is correct to the best of my knowledge and understand that any falsification is reason for the Local Plumbing Inspector to deny a Permit.

Signature of Owner/Applicant Date 7/31/85

Caution: Inspection Required

I have inspected the installation authorized above and found it to be in compliance with the Subsurface Wastewater Disposal Rules.

Local Plumbing Inspector Signature Date Approved

PERMIT INFORMATION

THIS APPLICATION IS FOR:

1. ☐ NEW SYSTEM
2. ☒ REPLACEMENT SYSTEM
3. ☐ EXPANDED SYSTEM
4. ☐ SEASONAL CONVERSION
5. ☐ EXPERIMENTAL SYSTEM

THIS APPLICATION REQUIRES:

1. ☒ NO RULE VARIANCE REQUIRED
2. ☐ NEW SYSTEM VARIANCE Attach New System Variance Form
3. ☐ REPLACEMENT SYSTEM VARIANCE Attach Replacement System Variance Form
3. ☐ Requires only Local Plumbing Inspector Approval
4. ☐ Requires both State and Local Plumbing Inspector Approval

INSTALLATION IS

COMPLETE SYSTEM

1. ☒ NON-ENGINEERED SYSTEM
2. ☐ PRIMITIVE SYSTEM (Includes Alternative Toilet)
3. ☐ ENGINEERED (+ 2000 gpd)

INDIVIDUALLY INSTALLED COMPONENTS:

4. ☐ TREATMENT TANK (ONLY)
5. ☐ HOLDING TANK
6. ☐ ALTERNATIVE TOILET (ONLY)
7. ☐ NON-ENGINEERED DISPOSAL AREA (ONLY)
8. ☐ ENGINEERED DISPOSAL AREA (ONLY)
9. ☐ SEPARATED LAUNDRY SYSTEM

IF REPLACEMENT SYSTEM:

YEAR FAILING SYSTEM INSTALLED 1950's

THE FAILING SYSTEM IS:

1. ☐ BED 3. ☐ TRENCH
2. ☐ CHAMBER 4. ☒ OTHER unknown

DISPOSAL SYSTEM TO SERVE:

1. ☒ SINGLE FAMILY DWELLING
2. ☐ MODULAR OR MOBILE HOME
3. ☐ MULTIPLE FAMILY DWELLING
4. ☐ OTHER _____ SPECIFY

SIZE OF PROPERTY	ZONING	TYPE OF WATER SUPPLY
6.5± acres	residential	existing dug well

DESIGN DETAILS (SYSTEM LAYOUT SHOWN ON PAGE 3)

TREATMENT TANK

1. ☒ SEPTIC: ☒ Regular ☐ Low Profile
2. ☐ AEROBIC

SIZE: 1000 GALS.

WATER CONSERVATION

1. ☒ NONE
2. ☐ LOW VOLUME TOILET
3. ☐ SEPARATED LAUNDRY SYSTEM
4. ☐ ALTERNATIVE TOILET

SPECIFY: _____

PUMPING

1. ☐ NOT REQUIRED
2. ☐ MAY BE REQUIRED (DEPENDING ON TREATMENT TANK LOCATION AND ELEVATION)
3. ☒ REQUIRED

DOSE: 60 GALS.

CRITERIA USED FOR DESIGN FLOW (BEDROOMS, SEATING, EMPLOYEES, WATER RECORDS, ETC.)

3-bedroom, single family dwelling

sized per Table 7-1 of the SSWD Rules (10-144A CMR 241)

(minimum flow)

DESIGN FLOW: 270 gpd (GALLONS PER DAY)

SOIL CONDITIONS USED FOR DESIGN PURPOSES

PROFILE	CONDITION
5	C

DEPTH TO LIMITING FACTOR: 20"

SIZE RATINGS USED FOR DESIGN PURPOSES

1. ☐ SMALL
2. ☒ MEDIUM
3. ☐ MEDIUM-LARGE
4. ☐ LARGE
5. ☐ EXTRA LARGE

DISPOSAL AREA TYPE/SIZE

1. ☒ BED 700 Sq. Ft.
2. ☐ CHAMBER _____ Sq. Ft.
   ☐ REGULAR ☐ H-20
3. ☐ TRENCH _____ Linear Ft.
4. ☐ OTHER: _____

SITE EVALUATOR STATEMENT

(☐ SITE EVALUATION WAIVED BY LOCAL OPTION)

On 5-26-85 (date) I conducted a site evaluation for this project and certify that the data reported is accurate. The system I propose is in accordance with the Subsurface Wastewater Disposal Rules.

William T. Noble 75 6-2-85

Site Evaluator or Professional Engineer's Signature SE# Date

* Local Plumbing Inspectors Signature if a Local Site Evaluation Waiver under a Local Option

STATE OF MAINE WILLIAM T NOBLE #75 LICENSED SITE EVALUATOR

85005A

Department of Human Services
Division of Health Engineering

SUBSURFACE WASTEWATER DISPOSAL SYSTEM APPLICATION

Town, City, Plantation	Street, Road, Subdivision	Owners Name
AUGUSTA	SUMMERHAVEN ROAD	PATRICK D. MICHAUD

SUBSURFACE WASTEWATER DISPOSAL PLAN

Scale 1" = 20 FT.

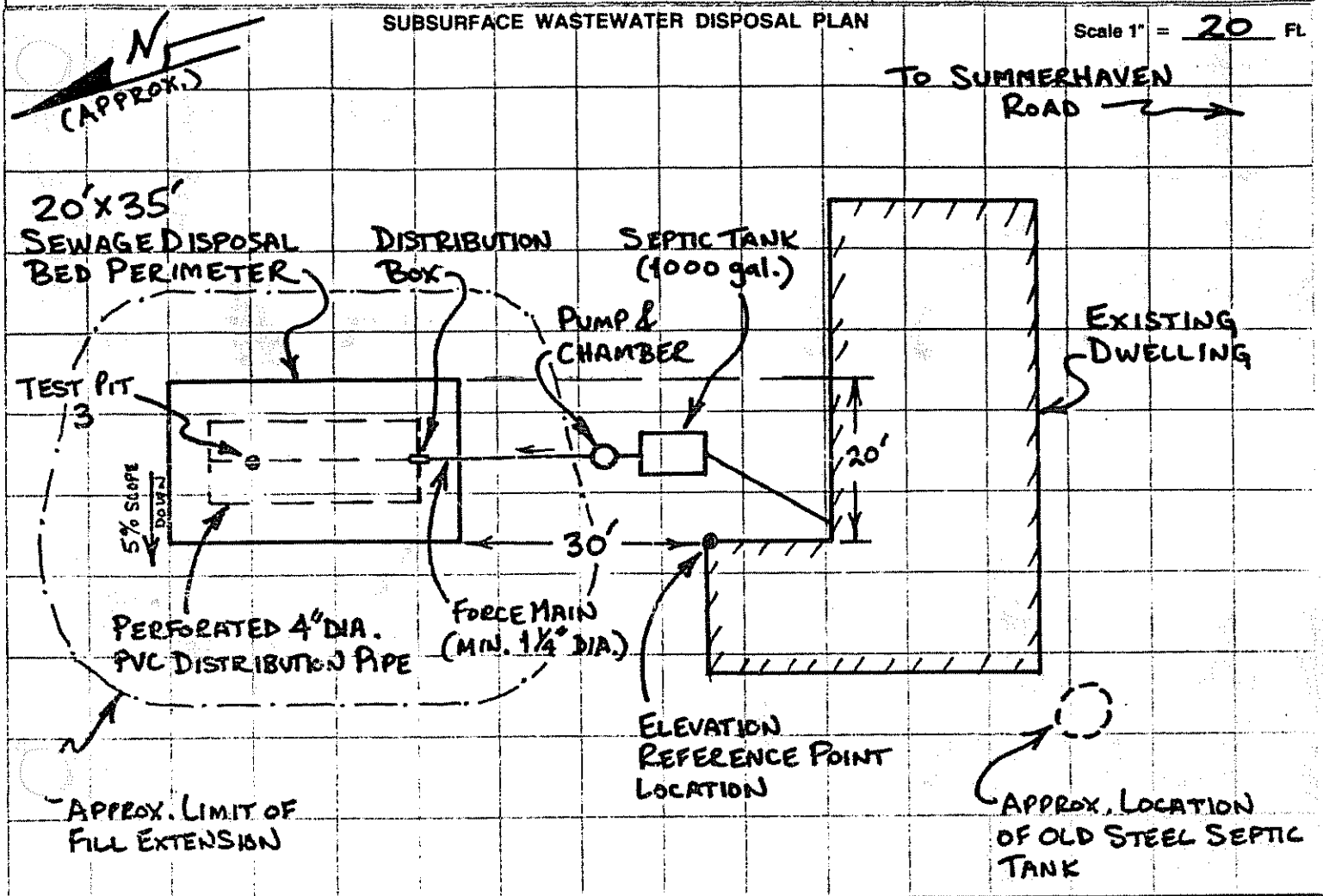

FILL REQUIREMENTS		CONSTRUCTION ELEVATIONS		ELEVATION REFERENCE POINT LOCATION & DESCRIPTION
Depth of Fill (Upslope)	28"	Reference Elevation is	100.0"	NAIL WITH YELLOW FLAGGING AT CORNER OF BARN, 80" ABOVE GROUND LEVEL AT BASE OF BARN.
Depth of Fill (Downslope)	40±"	Bottom of Disposal Area	49.0"	
		Top of Distribution Lines	60.0"	

DISPOSAL AREA CROSS SECTION

Scale:
Vertical: 1 inch = 10 Ft.
Horizontal: 1 inch = 10 Ft.

NOTES:

1. BACKFILL & PERIMETER FILL TO BE SANDY LOAM OR COARSER.
2. GRADE LAND AROUND DISPOSAL BED TO DIVERT WATER FROM AREA.
3. REMOVE ORGANIC LAYER & SCARIFY THE SOIL SURFACE BEFORE INSTALLING FILL.
4. REQUIRED FILL DEPTHS MAY VARY FROM THOSE SHOWN DUE TO IRREGULARITIES IN GROUND SURFACE.
5. REFER TO SECTIONS 11 & 12 IN SSWD RULES FOR FURTHER BED INSTALLATION DETAILS.

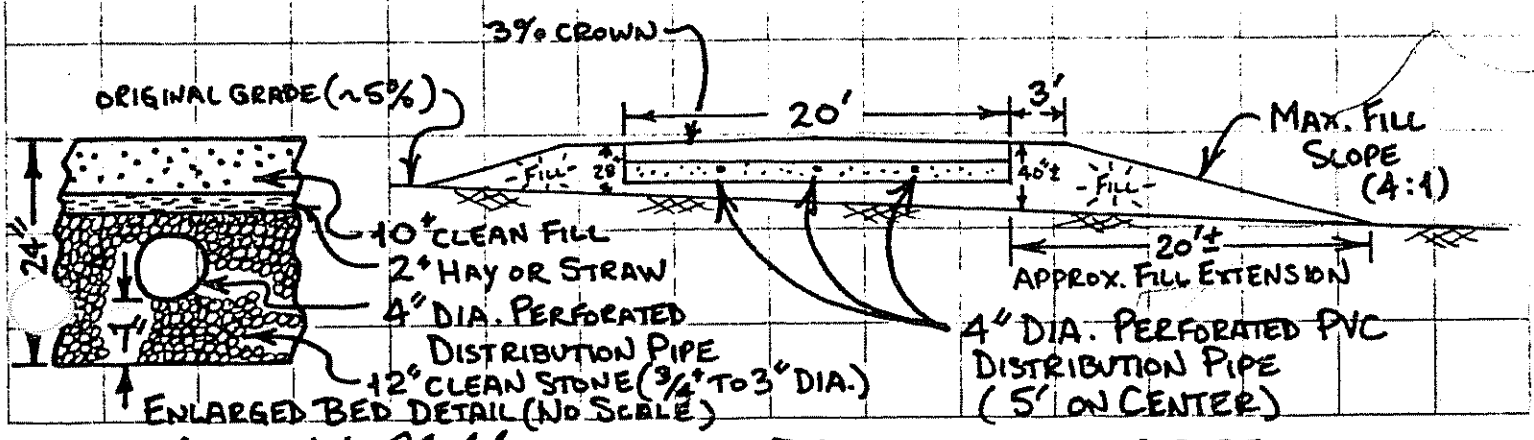

William J. Noble
Site Evaluator or Professional Engineer's Signature

75
SE #

6-2-85
Date

HHE-200 Rev. 4/83

SURFACE WASTEWATER DISPOSAL SYSTEM APPLICATION

Department of Human Services
Division of Health Engineering

85005A

City, Plantation	Street, Road, Subdivision	Owners Name
AUGUSTA	SUMMERHAVEN ROAD	PATRICK D. MICHAUD

SITE PLAN

Scale 1" = 50 FL

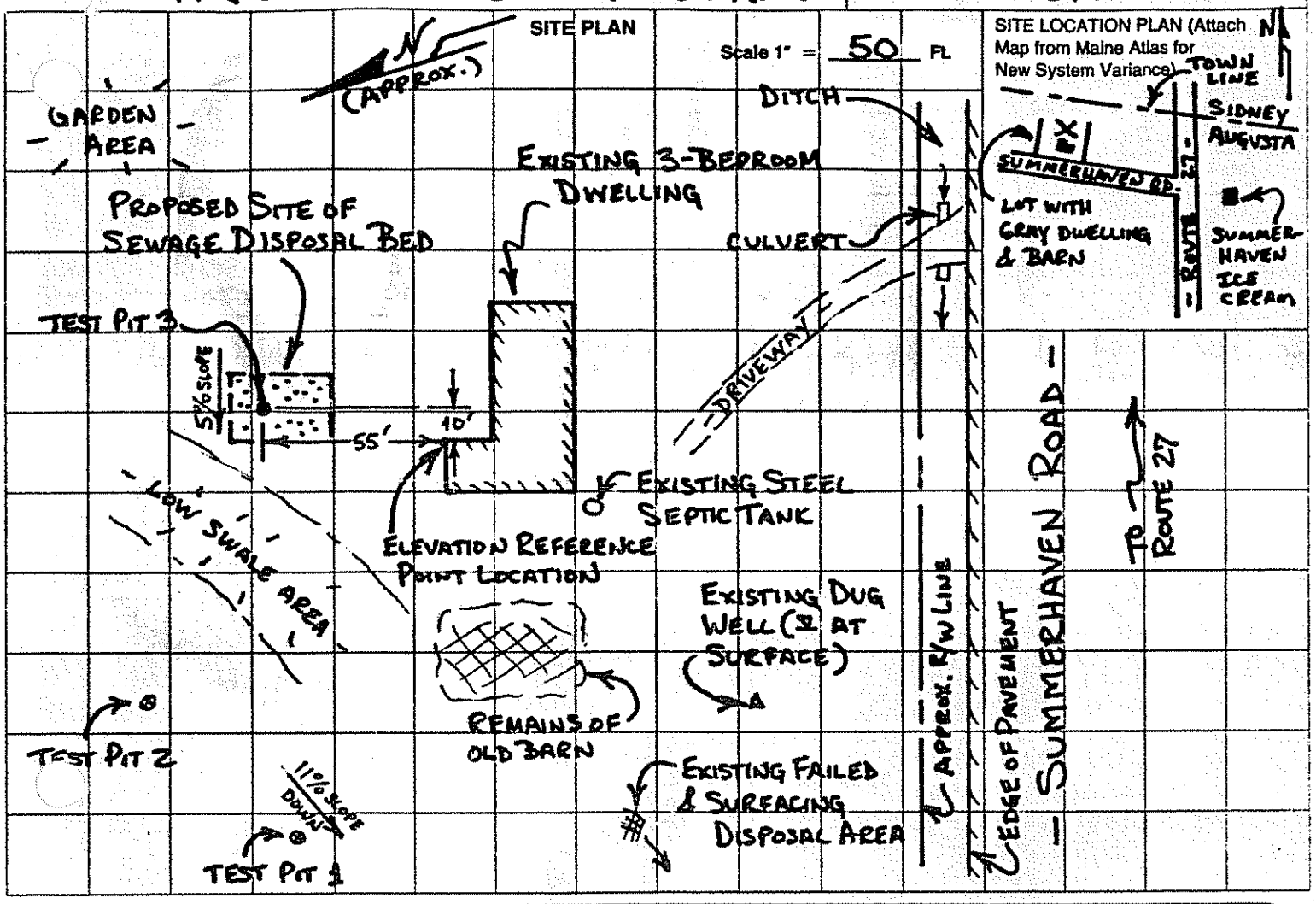

SOIL DESCRIPTION AND CLASSIFICATION (Location of Observation Holes Shown Above)

Observation Hole 2 ☒ Test Pit ☐ Boring

1 1/2 " Depth of Organic Horizon Above Mineral Soil

DEPTH BELOW MINERAL SOIL SURFACE (Inches)

Texture	Consistency	Color	Mottling
SANDY LOAM	FRIABLE	DARK BROWN	
LOAMY SAND		YELLOWISH BROWN	
SAND		OLIVE BROWN	COMMON DISTINCT
	FIRM		

Soil	Classification	Slope	Limiting Factor	
6 (Profile)	C (Condition)	~0 %	18	☒ Ground Water ☐ Restrictive Layer ☐ Bedrock

Observation Hole 3 ☒ Test Pit ☐ Boring

1 " Depth of Organic Horizon Above Mineral Soil

DEPTH BELOW MINERAL SOIL SURFACE (Inches)

Texture	Consistency	Color	Mottling
SANDY LOAM	FRIABLE	BROWN	
		YELLOWISH BROWN	
		DARK GRAYISH BROWN	
LOAMY SAND		OLIVE BROWN	COMMON DISTINCT
	FIRM	OLIVE	MANY PROMINENT

Soil	Classification	Slope	Limiting Factor	
5 (Profile)	C (Condition)	5 %	20	☒ Ground Water ☐ Restrictive Layer ☐ Bedrock

NOTE: TEST PIT 1 HAS A SIMILAR SOIL PROFILE, WITH COMMON DISTINCT MOTTLES AT 9". CLASSIFICATION IS 6-D SOIL.

William J. Noble — Site Evaluator or Professional Engineer's Signature

75 — SE#

6-2-85 — Date