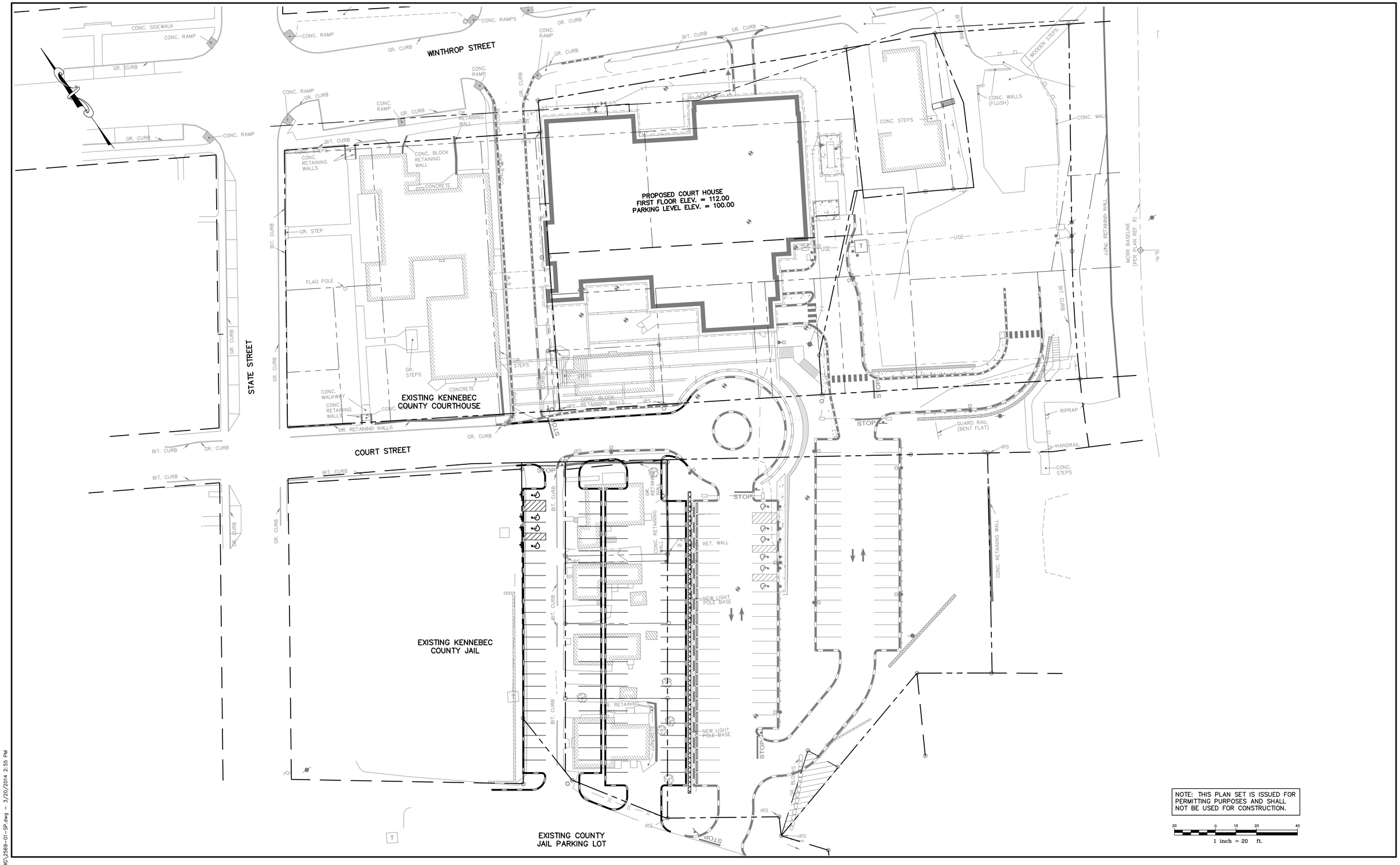

NOTE: THIS PLAN SET IS ISSUED FOR PERMITTING PURPOSES AND SHALL NOT BE USED FOR CONSTRUCTION.

20 0 10 20 40

1 inch = 20 ft.

U:\2569.01\Z - CAD\DWG\2569-01-SP.dwg - 3/20/2014 2:55 PM

Rev.	Date	Revision
–	–	–

Issued For	Date	By
CLIENT REVIEW	2/20/14	AMP

Design: JWA	Draft: CG	Date: FEB 2014
Checked: DER	Scale: 1"=20'	Job No.: –
File Name: 2569-01-SP.dwg		

This plan shall not be modified without written permission from Gorrill-Palmer Consulting Engineers, Inc.(GPCEI). Any alterations, authorized or otherwise, shall be at the user's sole risk and without liability to GPCEI.

GP Gorrill-Palmer Consulting Engineers, Inc.
Engineering Excellence Since 1998
PO Box 1237
15 Shaker Road
Gray, ME 04039
207-657-6910
FAX: 207-657-6912
E-Mail: mailbox@gorrillpalmer.com

Drawing Name: **Overall Site Plan**

Project: **Parking Lot**
Augusta, Maine

Client: **Augusta Parking District**
Augusta, Maine

Drawing No. *C100*

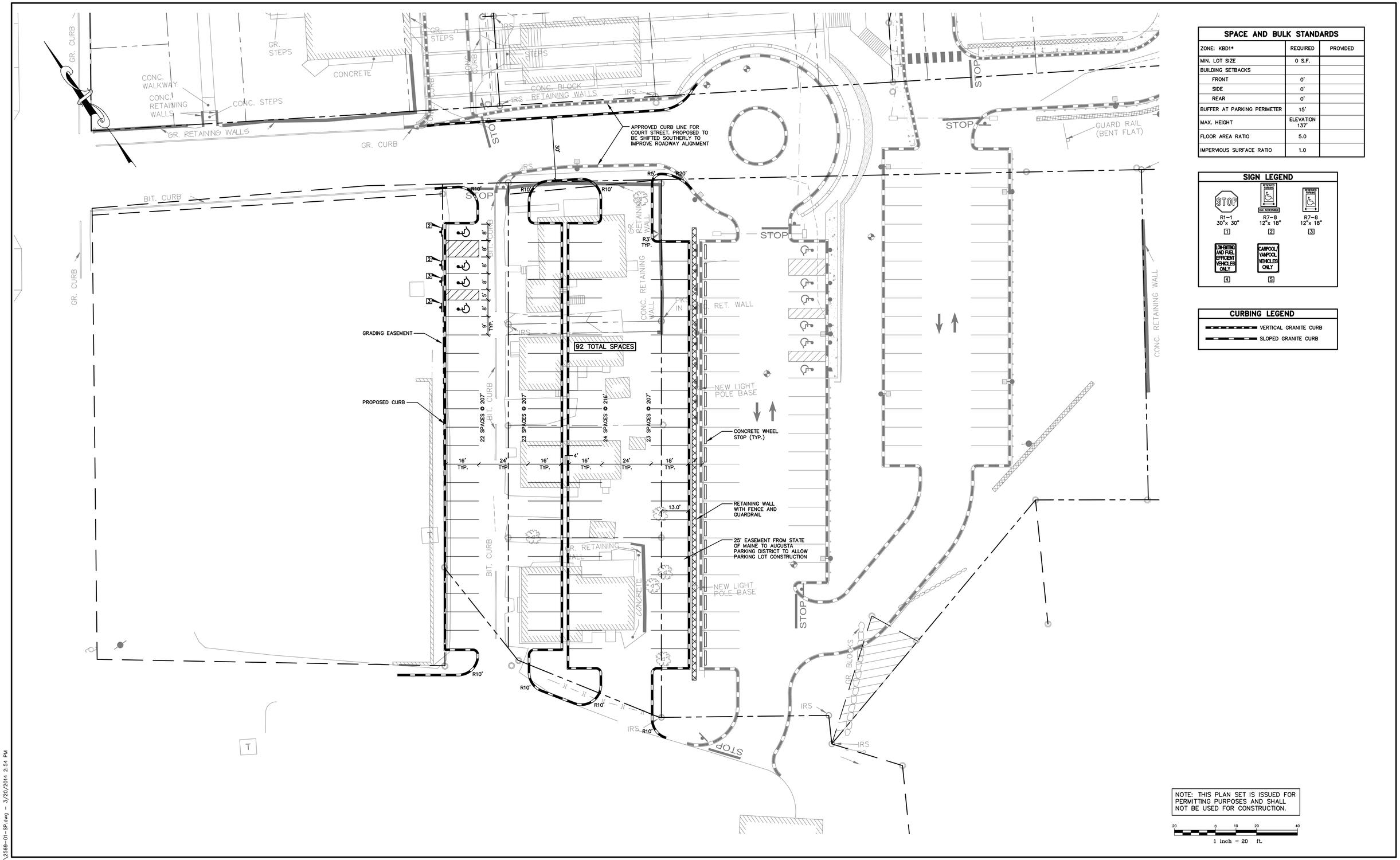

SPACE AND BULK STANDARDS		
ZONE: KBD1*	REQUIRED	PROVIDED
MIN. LOT SIZE	0 S.F.	
BUILDING SETBACKS		
FRONT	0'	
SIDE	0'	
REAR	0'	
BUFFER AT PARKING PERIMETER	15'	
MAX. HEIGHT	ELEVATION 137'	
FLOOR AREA RATIO	5.0	
IMPERVIOUS SURFACE RATIO	1.0	

SIGN LEGEND

STOP R1-1 30"x 30" 1	RESERVED PARKING NON ACCESSIBLE R7-8 12"x 18" 2	RESERVED PARKING R7-8 12"x 18" 3
LOW-EMITTING AND FUEL EFFICIENT VEHICLES ONLY 4	CARPOOL/ VANPOOL VEHICLES ONLY 5	

CURBING LEGEND

- VERTICAL GRANITE CURB
- SLOPED GRANITE CURB

NOTE: THIS PLAN SET IS ISSUED FOR PERMITTING PURPOSES AND SHALL NOT BE USED FOR CONSTRUCTION.

20 0 10 20 40
1 inch = 20 ft.

U:\2569.01\Z - CAD\DWG\2569-01-SP.dwg - 3/20/2014 2:54 PM

Rev.	Date	Revision
–	–	–

Issued For	Date	By
CLIENT REVIEW	2/20/14	AMP

Design: JWA	Draft: CG	Date: FEB 2014
Checked: DER	Scale: 1"=20'	Job No.: –
File Name: 2569-01-SP.dwg		

This plan shall not be modified without written permission from Gorrill-Palmer Consulting Engineers, Inc.(GPCEI). Any alterations, authorized or otherwise, shall be at the user's sole risk and without liability to GPCEI.

Gorrill-Palmer Consulting Engineers, Inc.
Engineering Excellence Since 1998
PO Box 1237
15 Shaker Road
Gray, ME 04039
207-657-6910
FAX: 207-657-6912
E-Mail: mailbox@gorrillpalmer.com

Drawing Name: **Site Plan**

Project: **Parking Lot**
Augusta, Maine

Client: **Augusta Parking District**
Augusta, Maine

Drawing No. *C101*

STATE STREET

COURT STREET

EXISTING KENNEBEC COUNTY COURTHOUSE

EXISTING KENNEBEC COUNTY JAIL

EXISTING COUNTY JAIL PARKING LOT

GRADING EASEMENT

NEW LIGHT POLE BASE

CONC. RET. WALL

GUARD RAIL (BENT FLAT)

STOP

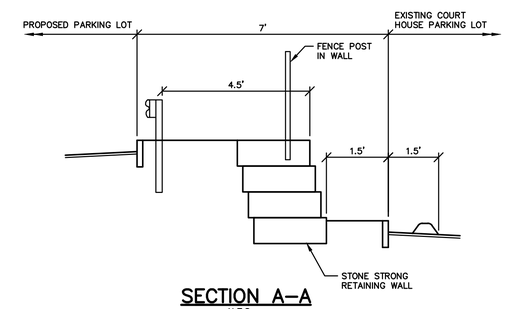

SECTION A–A

N.T.S.

NOTE: THIS PLAN SET IS ISSUED FOR PERMITTING PURPOSES AND SHALL NOT BE USED FOR CONSTRUCTION.

20 0 10 20 40

1 inch = 20 ft.

U:\2569.01\Z - CAD\DWG\2569-01-GRADE.dwg - 3/20/2014 2:47 PM

Rev.	Date	Revision
–	–	–

Issued For	Date	By
CLIENT REVIEW	2/20/14	AMP

Design: JWA	Draft: CG	Date: FEB 2014
Checked: DER	Scale: 1"=20'	Job No.: –
File Name: 2569-01-GRADE.dwg		

This plan shall not be modified without written permission from Gorrill-Palmer Consulting Engineers, Inc.(GPCEI). Any alterations, authorized or otherwise, shall be at the user's sole risk and without liability to GPCEI.

GP Gorrill-Palmer Consulting Engineers, Inc.
Engineering Excellence Since 1998
PO Box 1237
15 Shaker Road
Gray, ME 04039
207-657-6910
FAX: 207-657-6912
E-Mail: mailbox@gorrillpalmer.com

Drawing Name: **Conceptual Grading Plan**

Project: **Satellite Parking Lot**
Augusta, Maine

Client: **Augusta Parking District**
Augusta, Maine

Drawing No. C102